RK05
disk drive
engineering drawings

R. Tinga.
2370 L.

digital equipment corporation · maynard, massachusetts

digital EQUIPMENT CORPORATION
MAYNARD, MASSACHUSETTS

DRAWING DIRECTORY

CUSTOMER PRINT SET INDEX

THIS IS PRINT SET X

SEQUENCE	
DRAWING DIRECTORY	B-DD-RKØ5-Ø SHEET #1 ONLY
MODULE UTILIZATION LIST	C-MU-RKØ5-Ø-2
READ/WRITE	D-CS-G18Ø-Ø-1
INDEX SECTOR	D-CS-M77ØØ-Ø-1
CONTROL & INTERLOCK	D-CS-M77Ø2-Ø-1
TRACK ADDRESS DIFFERENCE	D-CS-M77Ø1-Ø-1
POSITION SERVO PREAMP	D-CS-G938-Ø-1
SERVO POWER AMP CIRCUIT	D-CS-H6Ø4-Ø-1
SERVO POWER AMP	E-UA-H604-0-0
CONTROL PANEL CIRCUIT	D-CS-5409698-0-1
CONTROL PANEL	E-IA-5409698-0-0
RELAY BOARD CIRCUIT	D-CS-5409574-0-1
DECPACK MOTOR RELAYS	E-IA-5409574-0-0
CHASSIS WIRING	D-BD-RKØ5-Ø-1
ACCESSORY LIST	A-AL-RKØ5-Ø-17
POWER SUPPLY (H743)	B-DD-H743-0
WIRE LIST	K-WL-RKØ5-0-3

SEQUENCE	
MFG. PRINT SET	
MODULE UTILIZATION (PL)	A-PL-RKØ5-Ø-2
RKØ5 TESTER	B-DD-RKØ5-T
DECPACK ASSY	D-UA-RKØ5-0-0
DECPACK ASSY (PL)	A-PL-RKØ5-0-0
WIRED ASSY	D-AD-7008696-0-0
LINEAR POSITIONER ASSY	D-AD-7008702-0-0
LINEAR POSITIONER ASSY (PL)	A-PL-7008702-0-0
H743 POWER SUPPLY	B-DD-H743-0

UNIT VARIATIONS

VARIATION	TITLE	PRINT SET TYPE RKØ5-Ø
RKØ5-AA	DECPACK 115V 60HZ	X
RKØ5-AB	DECPACK 230V 60HZ	X
RKØ5-BA	DECPACK 115V 50HZ	X
RKØ5-BB	DECPACK 230V 50HZ	X
RKØ5-CA	RKØ5-AA, H967	
RKØ5-CD	RKØ5-BB, H967	
RKØ5-DE	RKØ5-AA, H960, 861 POWER CONTROL	
RKØ5-DF	RKØ5-AB, H960, 861	
RKØ5-DH	RKØ5-BA, H960, 861	
RKØ5-DJ	RKØ5-BB, H960, 861	

REVISIONS

REV	CHG. NO.	DATE
A	RKØ5-14	[illegible]
B	RKØ5-16	E.S.
C	RKØ5-23	[illegible]
D	RKØ5-26	G.S.
E	RKØ5-28	[illegible]
F	RKØ5-30	E.S.
H	RKØ5-31	D.J.
J	RKØ5-32	D.J.
K	RKØ5-34	D.J.
L	RKØ5-35	[illegible]
M	RKØ5-38	[illegible]
N	RKØ5-39	[illegible]
P	RKØ5-40	[illegible]
R	RKØ5-41	[illegible]
S	RKØ5-42	[illegible]
T	RKØ5-45	[illegible]
U	RKØ5-46	[illegible]
V	RKØ5-48	[illegible]
W	RKØ5-50	[illegible]
Y	RKØ5-51	[illegible]
Z	RKØ5-52	[illegible]
AA	RKØ5-53	[illegible]
AB	RKØ5-54	[illegible]
AC	RKØ5-55	1/75
AD	RKØ5-56	[illegible]

USED ON OPTION/MODEL

DRN.	J. FLEMING	DATE 1/26/72
CHK'D.	[illegible]	DATE 5-2-72
PROJ. ENG.	[illegible]	DATE 5/2/72
PROD.	A. Karlsberg	DATE 5/4/72
FIELD SERV.	[illegible]	DATE 5/4/72

TITLE: DECPACK ASSY

SIZE	CODE	NUMBER	REV.
B	DD	RKØ5-Ø	AD

DIST

DRB 106

DEC 16-(325) 1062

This drawing and specifications, herein, are the property of Digital Equipment Corporation and shall not be reproduced or copied or used in whole or in part as the basis for the manufacture or sale of items without written permission.

NOTE:
TERMINATOR OR DISKBUS CABLE CONNECTOR MAY BE INTERCHANGED BETWEEN SLOTS 7 AND 8.

	1	2	3	4	5	6	7	8
	G180	M7700	M7702	M7701	G938	M983	M930 *	M929
USAGE	1 2	1 2	1 2	1 2	1 2	1 2	1 2	1 2
USAGE	READ/ WRITE	INDEX & SECTOR	TRACK ADDRESS DIFFERENCE	CONTROL & INTERLOCK	POSITION SERVO PREAMP	CHASSIS CONNECTOR	TERMINATOR	DISKBUS CABLE CONNECTOR

* IF MORE THAN ONE DRIVE IS USED, M930 IS REPLACED BY M929 (BC11A), M930 IS USED IN THE LAST DRIVE ON THE BUS.

REVISIONS	CHANGE NO.	CHK	REV.
	RK05-00002		A
M. Tocco 1-11-72			
D. JENSEN			
Lula D. Jensen 30 May 72			
	RK05-00006&6A		B
M. Tocco 2-9-72			
JENSEN			
Lula D. Jensen 3-11-72			
	RK05-00023		C
G. SCHNEIDER			
	RK05-00040		D
E. ALLain 7-7-73			
G. SCHNEIDER			

FIRST USED ON OPTION/MODEL	QTY.	DESCRIPTION	PART NO.	ITEM NO.
RKØ5		PARTS LIST		

UNLESS OTHERWISE SPECIFIED DIMENSION IN INCHES TOLERANCES
DECIMALS: .XXX = .005, .XX = .02, .X = .1
ANGLES: ±0° 30'
REMOVE BURRS AND BREAK SHARP CORNERS SURFACE QUALITY ✓
MATERIAL
FINISH

DRN. D. Schmidt	DATE 11-2-71	digital EQUIPMENT CORPORATION MAYNARD, MASSACHUSETTS
CHK'D. J. F. Conroy	DATE 11-9-71	
ENG. John Jensen	DATE 24 Nov 71	TITLE: MODULE UTILIZATION
PROJ. ENG. C. C. Simmons	DATE 11-24-71	
PROD. G. A. Schneider	DATE 11-29-71	
NEXT HIGHER ASSY. B-DD-RKØ5-Ø		SIZE C, CODE MU, NUMBER RKØ5-Ø-2, REV. D
SCALE NONE		
SHEET 1 OF 1		DIST.

SIZE C, CODE MU, NUMBER RKØ5-Ø-2, REV. D

DEC FORM NO. DRC 100-A

DRAWING AND SPECIFICATIONS, HEREIN, ARE THE PROPERTY OF DIGITAL EQUIPMENT CORPORATION AND SHALL NOT BE REPRODUCED OR COPIED OR USED IN WHOLE OR IN PART AS THE BASIS FOR THE MANUFACTURE OR SALE OF ITEMS WITHOUT WRITTEN PERMISSION.
COPYRIGHT © 1974 DIGITAL EQUIPMENT CORPORATION"

NOTES:

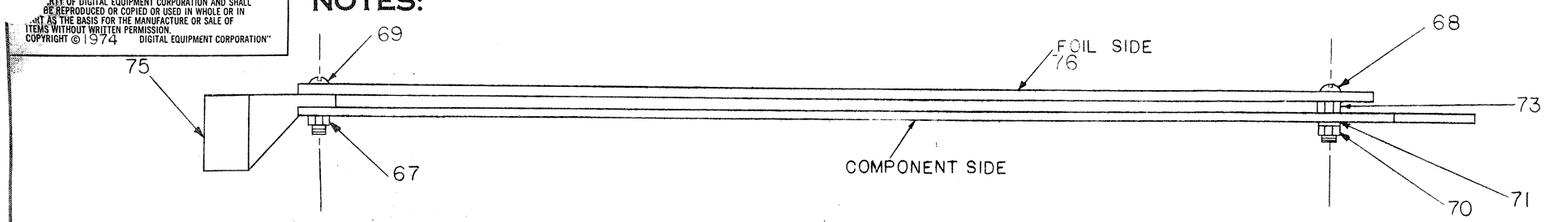

NOTE:
DO NOT INSERT ⟶ HANDLE HOLE EYELETS ON OUTSIDE HANDLE HOLES: (2 PLCS)

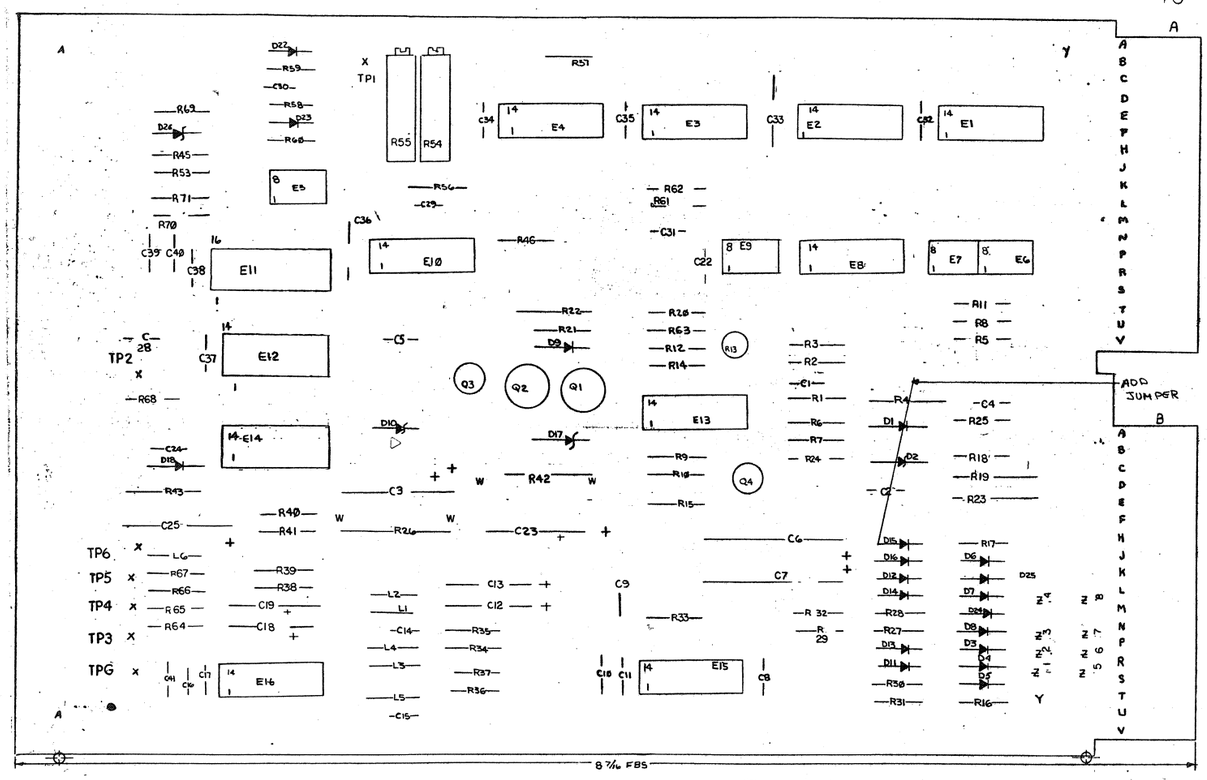

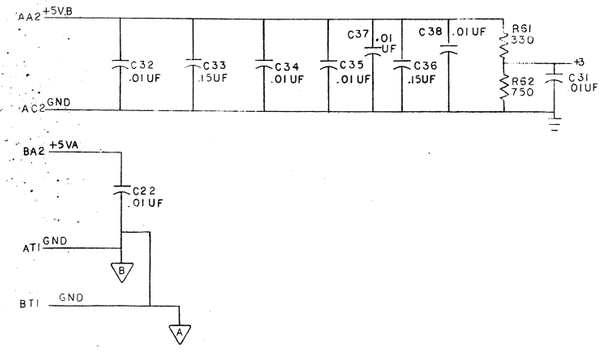

DEC 380	1	8		
DEC 75452	4	8		
IC TYPE	GND	+5V		
GND AND 5V ARE USUALLY PIN 7 AND 14 RESPECTIVELY EXCEPTIONS ARE STATED ABOVE				
IC PIN LOCATIONS				

1	D26	DIODE IN748A (3.9V ZENER)	1100122	79
1	R69	RES. 180 1/4W 5%	1301322	78
2	R7,R10	RES. 100 1/4W 5%	1300229	77
1		NOISE SHIELD	5009893	76
2		HANDLE,FLIP CHIP-GREEN	9008337-01	75
7	TPG,TP1 THRU TP6	SWAGE LUG	9007791	74
2		HEX NUT,NYLON,#2-56	9007263	73
2		EYELET #GS4-7	9006732	72
2		INTERNAL LOCK WASHER #2-56	9006631	71
2		HEX NUT #2-56	9006555	70
2		SCREW 4/40X3/8	9006011-4	69
2		SCREW PAN HD #2-56X5/16	9006002-1	68
2		KEP NUT 4/40	9006557	67

3	E6,E7,E9	I.C. DEC 75452	1910645	66
2	E15,16	I.C. DEC 733	1910644	65
1	E14	I.C. DEC 1414	1910337	64
1	E5	I.C. DEC 741	1910298	63
1	E1	I.C. DEC 8881	1909705	62
2	E2,E8	I.C. DEC 380	1909485	61
1	E10	I.C. DEC 9601	1909373	60
1	E13	I.C. DEC 7472	1905588	59
2	E4,E12	I.C. DEC 7400	1905575	58
1	E3	I.C. DEC 7474	1905547	57
1	L6	INDUCTOR 120UH	1610663	56
2	L1,L2	INDUCTOR 56UH	1610661	55
3	L3,L4,L5	INDUCTOR 100UH	1610662	54
1	Q3	TRANSISTOR DEC 6534C	1503409-02	53
1	Q4	TRANSISTOR DEC 3009B	1503100	52
2	Q1,Q2	TRANSISTOR 2N2904	1501742	51
				50
1	R13	POT 1K 1/2W 20% 62PR	1309150-03	49
2	R54,55	POT 10K 3/4W 10% 76PR	1309143-10	48
2	R16,R17	RES.27K 1/4W 5%	1305346	47
2	R27,R28	RES.8.2K 1/4W 5%	1303179	46
1	R60	RES.220K 1/4W 5%	1302092	45
1	R4	RES.270 1/2W 5%	1300285	44
2	R40,R41	RES.560 1/4W 5%	1301890	43
6	R6,9,45,53,70,71	RES.5.6K 1/4W 5%	1301874	42
1	R11	RES.1.1K 1/4W 5%	1301475	41
1	R58	RES.3.3K 1/4W 5%	1300439	40
1	R62	RES.750 1/4W 5%	1301401	39
2	R15,R21	RES.1.2K 1/4W 5%	1301320	38
2	R30,R31	RES.15K 1/4W 5%	1300496	37
6	R5,8,18,38,39,57	RES.10K 1/4W 5%	1300479	36
1	R59	RES.4.7K 1/4W 5%	1300447	35
1	E11	I.C.DEC 7413	1910436	34
16	R1,R2,R3,R20,R34-37 R46,R56,R63-68	RES. 1K 1/4W 5%	1300365	33
2	R24,R14	RES.470 1/4W 5%	1300316	31
1	R43	RES.470 1/2W 5%	1300315	30
3	R22,R25,R61	RES.330 1/4W 5%	1300295	29
2	R29,R32	RES.220 1/4W 5%	1300271	28
2	R26,R42	RES.180 1/4W 5%	1300262	27
1	R19	RES.160 1/4W 1%	1300260	26
1	R12	RES.150 1/4W 5%	1300250	25
1	R23	RES.150 1/2W 5%	1300249	24
1	R33	RES.47 1/4W 5%	1300202	23
8	1-8	GOLD WIREWRAP PINS	1210395-1	22
16	D1-D3-9,D11-16,D22-25	DIODE D672	1105275	21
1	D2	DIODE IN 751A(5.1V ZENER)	1110994	20
				19
3	D10,D17,D18	DIODE IN 753A (6.2V ZENER)	1102421	18
13	C9,C33,C36	CAP .15UF 50V 10% POLYCARBONATE	1010031	17
1	C15	CAP. 18PF 100V 5% D.M.	1002608	16
4	C12,C13,C18,C19	CAP. .15UF 35V 20% S.TANT	1002180	15
14	C4,10,11,16,17,22,24,28,31 32,34,35,37,38	CAP. .01UF 100V 20% DISC	1001610	14
2	C6,C7	CAP 10UF 35V 20% S.TANT	1000069	13
3	C3,C23,C25	CAP 6.8UF 35V 20% S.TANT	1000067	12
1	C2	CAP 680PF 100V 5% D.M.	1000026	11
2	C5,C30	CAP 470PF 100V 5% D.M.	1000024	10
1	C29	CAP 150PF 100V 5% D.M.	1000019	9
1	C41	CAP 27PF 100V 5% D.M.	1001739	8
1	C14	CAP 56PF 100V 5% D.M.	1000012	7
3	C1,C39,C40	CAP 47PF 100V 5% D.M.	1000011	6
1	C8	CAP 33PF 100V 5% D.M.	1000009	5
		ETCHED CIRCUIT BOARD	5009743	4
		MODULE ECO HISTORY	B-MH-G180-0-6	3
		ASSY/DRILLING HOLE LAYOUT	E-AH-G180-0-5	2
		X-Y COORDINATE HOLE LOCATION	K-CO-G180-0-4	1

QTY	REF. DESIGNATION	DESCRIPTION	PART NO.	ITEM NO.

PARTS LIST

ETCH BOARD REV. L

		IN746A	SAME
2N2904	2N2118A	IN753A	SAME
DEC 3009B	2N3009	IN751A	SAME
DEC 6534C	MPS6534	D672	IN3653
DEC NO.	EIA NO.	DEC NO.	EIA NO.

SEMICONDUCTOR CONVERSION CHART

REV.	CHANGE NO.	CHK	REVISIONS
L	6180-00008	N. FIELD	11/27/75 Fixed 11/6/74
K	6180-00006	DALE JENSEN	10-29-74 Dale Jensen 9-26-74

DRN. R. DUCETTE 10-22-71
CHK'D. NANCY MOORE 11-30-71
ENG. DALE JENSEN 1-22-72
PROJ. ENG. A. KARLSBERG 1-20-72
PROD.
NEXT HIGHER ASSY
SCALE
SHEET 1 OF 2

digital

TITLE: DEC PACK READ/WRITE

SIZE D | CODE CS | NUMBER G180-0-1 | REV. L
DIST.

DEC FORM NO. DRD 135.B

THIS SCHEMATIC IS FURNISHED ONLY FOR TEST AND MAINTENANCE PURPOSES. THE CIRCUITS ARE PROPRIETARY IN NATURE AND SHOULD BE TREATED ACCORDINGLY
COPYRIGHT 1971 BY DIGITAL EQUIPMENT CORPORATION

BUS WRITE DATA AND CLOCK L AJ1
BUS WRITE GATE L AJ2
SENT 1USec Before data
RK4-2 NO PROTECT L AN2
RK2-2 R/S/W READY L AP2
RK3-2 CYL 128 H AM2
Reduce WR. current.
BUS HD SELECT AP1
RK4-2 SEL/ READY L AH2
Sel. sp unit is ready
RK4-2 UNSAFE L AL2

RK1-2 SELECTED WT GATE H AV1

+15V A

E8 380 · E7 75452 · E9 75452 · E6 75452 · E2 380

R1 1K · R2 1K · R3 1K · C1 47PF · D1 D672 · R4 270 1/2W

E13 7472

D2 IN751A 5.1V · C2 680PF

R6 5.6K · R9 5.6K · R14 150 · R7 100 · Q1 DEC 2904 · R10 100

R13 1K · R12 470 · WRITE CURRENT ADJ · R63 1K · Q2 DEC2904

R20 1K · Q3 DEC 6534C · ERASE CURRENT SWITCH · R18 10K

R11 1.1K · R15 1.2K · R16 27K · R17 27K

D3 D672 · D4 D672 · D5 D672 · D11 D672 · D13 D672 · D6 D672 · D7 D672 · D24 D672 · D25 D672 · D12 D672 · D8 D672 · D14 D672 · D15 D672 · D16 D672

UPPER HEAD · LOWER HEAD · -15VA

+15V A · R29 220 · R27 8.2K · R28 8.2K · C6 10UF 20V · R30 15K · C7 10UF 20V · R31 15K · R32 220 · C8 33PF

RK1-2 FORCE UNSAFE TP BA1

+5V A · R24 470 · Q4 DEC3009B · R21 1.2K · R22 330 · R25 330 · E9 75452 · C4 .01UF · AU2 RK1-2 SET UNSAFE L

R23 150 1/2W · R19 180 1/2W

+6V A · C11 .01UF · E15 733 · R33 47 · C9 .15UF · C10 .01UF · GAIN≈100 · -6VA

PREAMPLIFIER

+15VA · R8 10K · R5 10K

+5VB · R69 180 · AD2 +12V · BD2 +15VA · R26 180 1W · +6V · D10 IN753A 6.2V · C3 6.8UF · D17 IN753A 6.2V · C23 6.8UF · -6VA · R42 180 1W · D18 IN753A 6.2V · C25 6.8UF · R43 470 1/2W · -6VB · BB2 -15VA · AB2 -15VB

RK05 - 4.19 4.19

PULSE FORMER

LOW PASS FILTER

C12 .15UF · R34 1K · L1 56UH · L3 100UH · L5 100 UH · R36 1K · C14 56PF · C15 18PF · R37 1K · C13 .15UF · R35 1K · L2 56UH · L4 100UH · GAIN≈10

E16 733 · C16 .01UF · -6VA · +6V C17 .01UF

PEAK DETECTOR

R40 560 · R64 1K · R38 10K · R39 10K · R41 560 · C18 .15UF · C19 .15UF · R65 1K · R66 1K · R67 1K · TP6 · TP3 · TP4 · TP5 · TPG · L6 120UH · C41 27PF

≈0.3 -0.6V P-P · ≈0.2-0.4V P-P

+12V · C28 .01UF · E14 1414 · R53 5.6K · C24 .01UF · -15VB · -6VB · R45 5.6K

+5VB · R70 5.6K · C40 47 · E11 74123 150NS · R71 5.6K · C39 47 · E12 7400

DATA SEPARATOR

+5VB · R54 10K · OL · R56 1K · C29 150PF · D22 D672 · R46 1K · TP1 · E10 9601 420 NS

E5 CONTROLS EIO DURATION · R57 10K · R59 4.7K · C30, 47PF · R60, 220K · D23 D672 · R58 3.3K · +15VB · E5 741 · D26 IN 748A 3.9V · -15VB · +5VB · R55 10K · CL

+3V · E4 7400 · E3 7474 · DATA WINDOW GENERATOR 250NS

E2 380 · E1 8881 · RKI-2 BUS READ DATA L · AE2 · RKI-2 BUS READ CLOCK L · AF2

BUS READ GATE L AK2 · E2 380 · C5 470PF · E3 7474 · DATA ONE WINDOW DELAY · ABI RKI-2 SELECTED READ GATE H

RK2-2 SELECT H AS2 · E1 8881 · AR2 RKI-2 BUS HIGH DENSITY L

TP2 · TP1 · 150NS · 420NS

UNLESS OTHERWISE INDICATED:
* INDICATES SWAGE LUG
A = ANALOG GND "A" BTI.
B = ANALOG GND "B" ATI
⏚ = DIGITAL GND AC2
----- = COMPONENTS NOT MOUNTED ON BOARD
ALL TIMES INDICATED ARE NOMINAL

SLOT -1

REVISIONS | CHN | CHG NO. | REV.

DRN B. A. Hale 12/14/70 · CHKD [illegible] · ENG J. Glen Sen 30 Dec 71 · PROG [illegible]

TRANSISTOR & DIODE CONVERSION CHART

DEC	EIA	DEC	EIA
DEC 6534C	NPS 6534	D672	IN3595
DEC 3009B	2N3009	IN753A	SAME
2N2904	2N2218A	IN754A	SAME
		IN748A	SAME
		IN748A	SAME

digital EQUIPMENT CORPORATION MAYNARD, MASSACHUSETTS

TITLE: DEC PACK READ/WRITE RKI-7

SIZE D · CODE CS · NUMBER G1807-0-1 · REV L · PRINTED CIRCUIT REV. L

SHEET 2 OF 2

DEC FORM NO. 0ND 116

THIS SCHEMATIC IS FURNISHED ONLY FOR TEST AND MAINTENANCE PURPOSES. THE CIRCUITS ARE PROPRIETARY IN NATURE AND SHOULD BE TREATED ACCORDINGLY
COPYRIGHT© 1971 BY DIGITAL EQUIPMENT CORPORATION

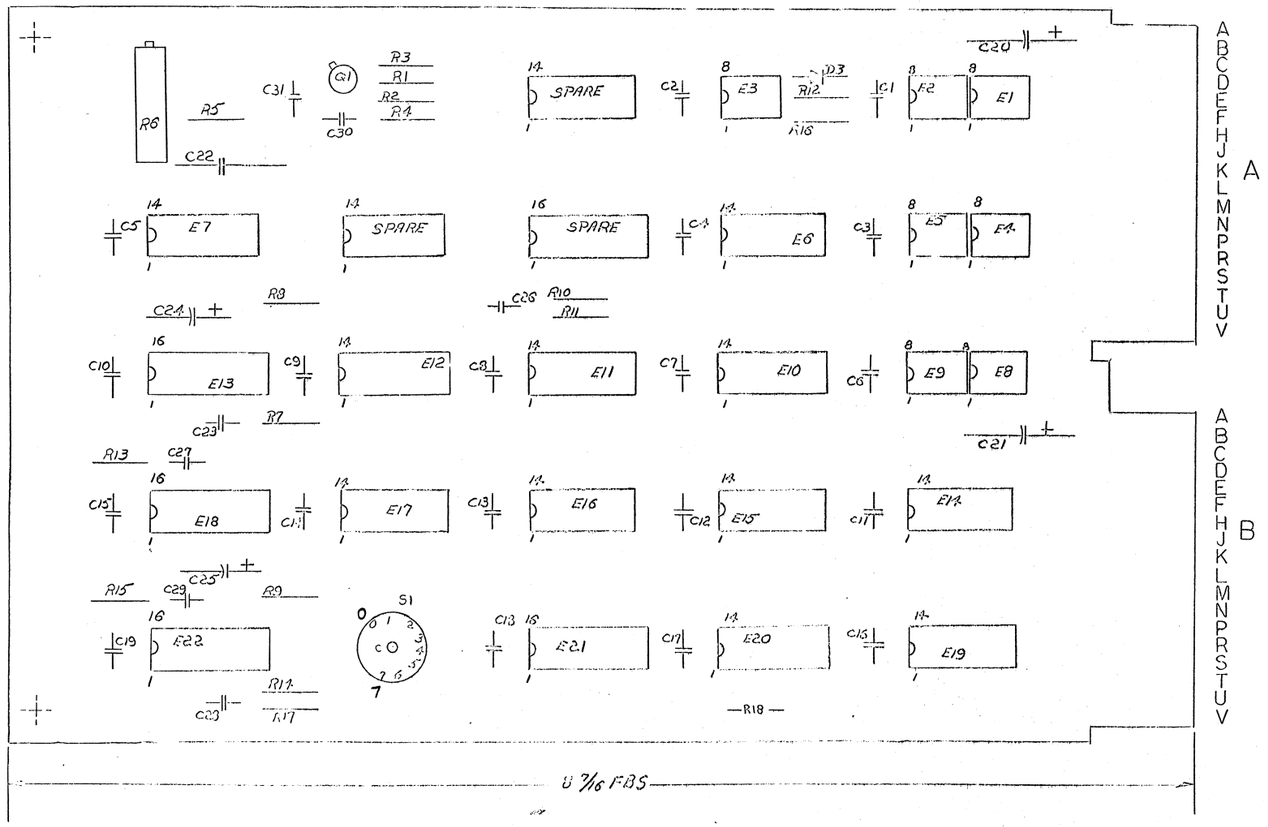

NOTES:

PIN 7 = GND ON E2, E5, E7, E11, E13,
PIN 14 = +5V ON E14, E17, E20, E21, E23

PIN 4 = GND ON E1, E3, E4, E9,
PIN 8 = +5V ON E10, E15, E16

PIN 10 = GND ON E8, E12
PIN 5 = +5V

PIN 1 = GND ON E22
PIN 8 = +5V

PIN 8 = GND ON E6, E18, E19
PIN 16 = +5V ON E14, E17, E20, E21, E23

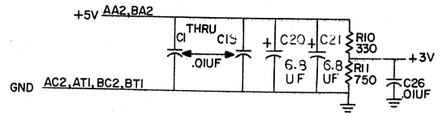

QTY	REF. DESIGNATION	DESCRIPTION	DEC PART NO.	ITEM NO.
		PARTS LIST		
		MODULE ECO HISTORY	B-MH-M7700-0-6	3
		ASSY/DRILLING HOLE LAYOUT	E-AH-M7700-0-5	2
		X-Y COORDINATE HOLE LOCATION	K-CO-M7700-0-4	1
1		ETCHED CIRCUIT BOARD	5009716	4
1		MODULE ECO HISTORY	1000016	5
2	C28, 27	CAP, 100PF 100V 5% D.M.	1000023	6
2	C23, C30	CAP. 330PF 100V 5% D.M.	1000024	7
1	C29	CAP. 470PF 100V 5% D.M.	1001610	8
2F	C1 thru C15, C26, C31	CAP. .01UF 100V 20% DISC	1001776	9
1	C25	CAP. 1.0UF 35V 10% S.TANT	1002180	10
1	C24	CAP. .15UF 35V 20% S.TANT	1300365	11
3	R5, 16, 17	RES 1K 1/4W 5%	1300479	12
1	D3	DIODE AZ5 (2.4)	1210042	13
1	S1	SWITCH ROTARY 8 POS	1101938	14
1	R1	RES. 100 ¼W 5%	1300229	15
1	R11	RES. 150 ¼W 5%	1300250	16
2	R4, 10	RES. 330 ¼W 5%	1300295	17
3	R3, R7, R18	RES. 10K ¼W 5%	1300479	17
1	R12	RES. 750 ¼W 5%	1301401	18
1	R9	RES. 22K ¼W 5%	1301808	19
1	R6	POT. 10K 3/4W 10%	1309143-10	20
3	R14, 15, 8	RES. 30K ¼W 5%	1302394	21
1	R13	RES. 18K ¼W 5%	1302465	22
1	Q1	TRANSISTOR DEC 3639C	1502762-01	23
1	E17	I.C. DEC 7474	1905547	24
2	E12, 16	I.C. DEC 7400	1905575	25
1	E10	I.C. DEC 7410	1905576	26
2	E6, 11	I.C. DEC 7493	1909054	27
2	E15, 19	I.C. DEC 380	1909485	28
2	E14	I.C. DEC 7404	1909686	29
1	E21	I.C. DEC 74145	1910047	30
1	E7	I.C. DEC 74121	1910230	31
7	E1-8, E9, E9	I.C. DEC 7452	1910645	32
3	E13, 18, 22	I.C. DEC 74123	1910436	33
1	E20	I.C. DEC 7401	1905590	34
		SOCKET	9006732	35
4		HANDLE, FLIP CHIP « MAGENTA	9008337-06	36
2				37
1	C28	CAP. .01UF 100V 10% MYLAR	1005784	38
1	R8	RESISTOR 4.7K ¼W 5%	1300447	39
2	C20, 21	CAP. 6.8UF 35V 20%	1000067	40

REVISIONS					
CHR	CHG NO	REV			
	10000	E	B.J. Hale	9/24	
			E. Simmons		
			B.C.		
	10002	F	B.J. Hale	2-17	
			D. JENSEN		
			[illegible]		
	10003	H	B.J. Hale	2-23	
			D. JENSEN		
			[illegible]		
	10004	J	B.J. Hale	4-22	
			D. JENSEN		
			[illegible]		
	10005	K	B.J. Hale	5-26	
			E. SIMMONS		
	10306	L	[illegible]		
			E. SIMMONS	8-26	
	10007	M	[illegible]	2/1/73	
			D. JENSEN		
			[illegible]		
	10008	N	[illegible]		
			[illegible]		
		P	[illegible]		

DRN	B.J. Hale	DATE 11/27/71
CHK'D	[illegible]	DATE
ENG	[illegible]	DATE 12/7/71
PROP	[illegible]	DATE 11/24/72

TRANSISTOR & DIODE CONVERSION CHART			
DEC	EIA	DEC	EIA
D664	IN5606		
DEC653	MPS6531		
AZ5(2.4V)	IN4370		

digital EQUIPMENT CORPORATION MAYNARD, MASSACHUSETTS

TITLE: RK2-1 DEC PAK INDEX AND SECTOR

SIZE	CODE	NUMBER	REV
D	CS	M7700-0-1	K

PRINTED CIRCUIT REV

SHEET 1 OF 2

DEC FORM NO. DRD 116

...ing and specifications, herein, are the prop... Digital Equipment Corporation and shall not be ...duced or copied or used in whole or in part as ...basis for the manufacture or sale of items without ...itten permission.

POWER SECTOR TRANSDUCER H
CHASSIS AD1
CHASSIS AE1
SECTOR INDEX RAW H
R1 100
R2 4.7K
R3 10K
R4 330
C30 330PF
C31 .01UF
Q1 DEC3639C
+5V
R5 1K
R6 10K
C22 .01UF
E7 74121 8-80 MS
SECTOR TIMING DELAY
C23 330
R7 10K
E13 74123 1MS
+3V
BD1 INDEX/SECTOR L RK2-2
C24 .15UF
R8 33K
E13 74123 1MS
E12 7400
AR2 INDEX PULSE L RK2-2
AS2 SECTOR PULSE L RK2-2
E2 75452 AF1 BUS SECTOR PULSE L RK2-2
E2 75452 AK1 BUS INDEX PULSE L RK2-2
E1 75452 AH1 BUS SECTOR ADDRESS ØL RK2-2
E1 75452 AJ1 BUS SECTOR ADDRESS 1L RK2-2
E5 75452 AL1 BUS SECTOR ADDRESS 2L RK2-2
E5 75452 AP1 BUS SECTOR ADDRESS 3L RK2-2
E4 75452 AM1 BUS R/W/S READY L RK2-2
E4 75452 AN1 BUS SEEK INCOMPLETE L RK2-2
E9 75452 AR1 BUS ADDRESS ACCEPTED L RK2-2
E9 75452 BA1 BUS ADDRESS INVALID L RK2-2
E8 75452 AV1 SEEK DONE INDICATOR RK2-2
E8 75452 AU1 WRITE INDICATOR RK2-2
E16 7400 AS1 ADDRESS ACCEPTED L RK2-2
E17 7474
E14 7404
INDEX PULSE TRUE CLEARS SECTOR CNTR AT NEXT SECTOR PULSE
E11 7493 SECTOR CNTR (1) (2) (4) (8)
HEAD SETTLE DELAY
R9 22K
C25 1UF
E18 74123 6MS
+3V
BL1 R/W/S READY H RK2-2
BK1 R/W/S READY L RK2-2
RK3-2 MOVE L BP1
RK5-2 INNER LIMIT H BJ1
BUS RESTORE L BB1
RK3-2 RTZ L BC1
E16 7400
E15 380
ABI RESTORE H RK2-2
SEEK MUST COMPLETE IN 280MS
E10 7410
SEEK INCOMPLETE CNTR
(1) SEEK INCOMPLETE (0)
RK4-2 READY H AC1
GOOD STROBE H
E12 7400
RK4-2 SELECT/READY L BH1
RK1-2 SELECTED WRITE GATE H AV2
BUS STROBE L BV1
To initiate an motion command.
C27 100PF R13 18K
C28 100PF R14 30K
C29 470PF R15 30K
E18 74123 150 NS
E22 74123 145
E22 74123 545
BE1 GOOD STROBE L RK2-2
RK3-2 ADDRESS INVALID L BF1
E16 7400
D3 A2.5 2.4V
R12 150
R16 1K
E3 75452
AA1 ON L RK2-2
RK1-2 SELECTED READ GATE H AF2
AE2 RK2-2 READ INDICATOR
E21 74145
E19 380
E20 7401
BUS SELECT 2L BT2
BUS SELECT 1L BS2
BUS SELECT ØL BR2
BUS SELECT 3L BU2
BU1
R18 10K
BUS RK-11D L
S1
SELECT L
R17 1K
BV2 RK2-2 SELECT H
BUS WRITE PROTECT SET L BS1
BR1 RK2-2 SELECT/WRITE PROTECT SET L
RK-11D L TRUE ALLOWS BINARY CODED SELECTION

SLOT 2

FIRST USED ON OPTION/MODEL	QTY.	DESCRIPTION	PART NO.	ITEM NO.
		PARTS LIST		

UNLESS OTHERWISE SPECIFIED DIMENSION IN INCHES. TOLERANCES
DECIMALS .XXX = .005 .XX = .02 .X = .1
ANGLES ±0° 30'
REMOVE BURRS AND BREAK SHARP CORNERS SURFACE QUALITY ✓
MATERIAL
FINISH

DRN. B. Wisle DATE 8-17-72
CHK'D. [illegible] DATE 8/23/72
ENG. K.R. Carnes DATE 10-5-72
PROJ. ENG. K.R. Carnes DATE 10-5-72
PROD. DATE
NEXT HIGHER ASSY.
SCALE
SHEET 2 OF 2

digital EQUIPMENT CORPORATION MAYNARD MASSACHUSETTS

TITLE DEC PAK INDEX AND SECTOR RK2-2

SIZE D | CODE CS | NUMBER M7703-0-1 | REV. R

DIST.

REVISIONS | REV | CHANGE NO. | CHK

BRUNING 40-322 18940
DEC FORM NO DRD 102-B

"THIS DRAWING AND SPECIFICATIONS, HEREIN, ARE THE PROPERTY OF DIGITAL EQUIPMENT CORPORATION AND SHALL NOT BE REPRODUCED OR COPIED OR USED IN WHOLE OR IN PART AS THE BASIS FOR THE MANUFACTURE OR SALE OF ITEMS WITHOUT WRITTEN PERMISSION.
COPYRIGHT © 1974 DIGITAL EQUIPMENT CORPORATION"

NOTES:

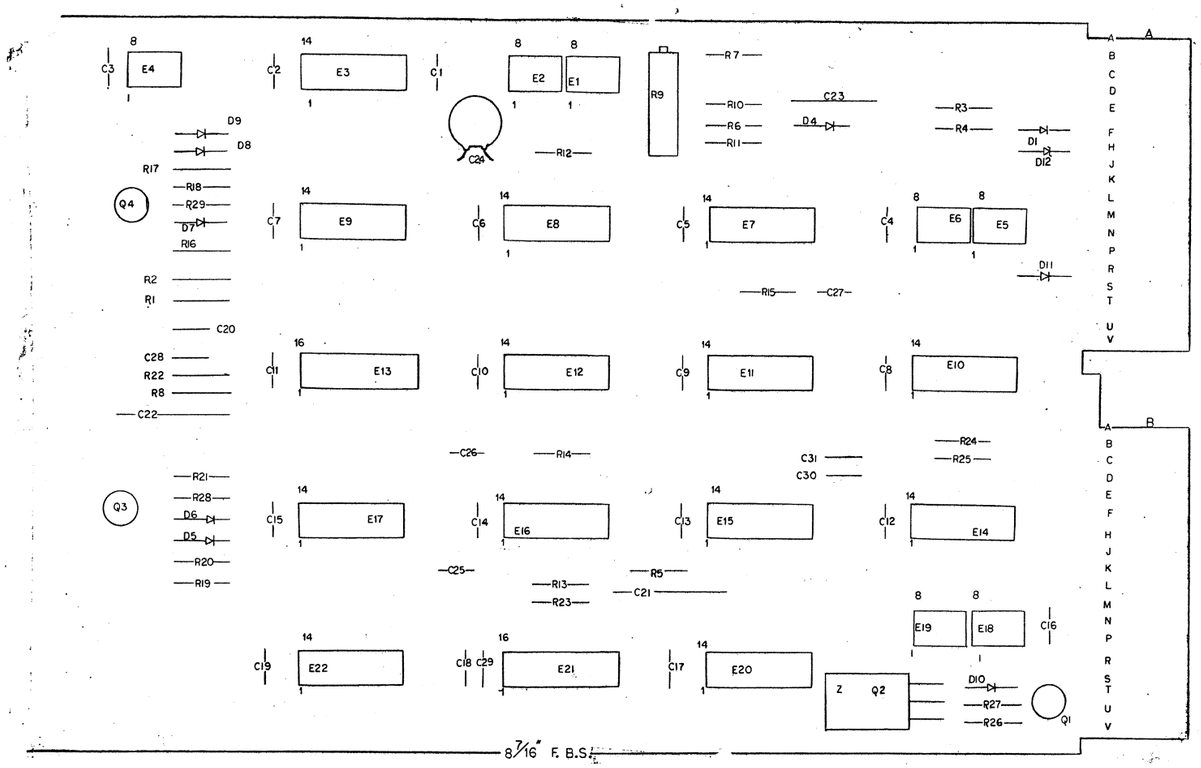

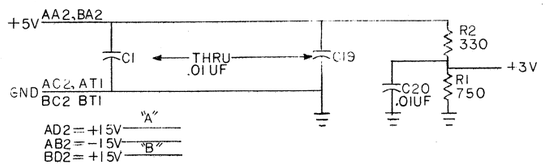

QTY	REF. DESIGNATION	DESCRIPTION	PART NO.	ITEM NO.
1	C24	CAP. .047UF 16V DISC	1009678	50
1	D12	DIODE IN5248B 18V 5%	1110766	49
1		KEP NUT #4	9006557	48
1		SCREW 4-40 X 5/16	9006010-1	47
2		HANDLE, FLIP CHIP-MAGENTA	9008337-06	46
4		EYELET #GS4-7	9006732	45
1	E1	I.C. DEC 301	1910282	44
6	E2,4,6,5,18,19	I.C. DEC 75451	1910406	43
2	E21, E13	I.C. DEC 74123	1910436	42
2	E22, E17	I.C. DEC 7493	1909054	41
2	E9, E15	I.C. DEC 7474	1905547	40
2	E12,10	I.C. DEC 7410	1905576	39
2	E11, E8	I.C. DEC 7404	1909686	38
1	E20	I.C. DEC 7402	1909004	37
4	E3,7,16,14	IC. DEC 7400	1905575	36
1	Q2	TRANSISTOR DEC 4403	1510171	35
1	Q3	TRANSISTOR DEC 6534D	1503409-00	34
1	Q1	TRANSISTOR DEC 2219	1501881	33
1	Q4	TRANSISTOR DEC 6531	1509338	32
1	R9	RES. 10K 3/4W 10% 76PR	1309143-10	31
1	R6	RES. 10M 1/4W 5%	1302666	30
2	R7,R10	RES. 1M 1/4W 5%	1309595	29
				28
				27
5	R17,5,22,23,8	RES. 10K 1/4W 5%	1300479	26
1	R18	RES. 5.6K 1/4W 5%	1301874	25
1	R11	RES. 4.7K 1/4W 5%	1300447	24
1	R4	RES. 680 1/4W 5%	1300424	23
1	R28	RES. 1.5K 1/4W 5%	1300391	22
9	R12,13,14,15,20,24,25,26,29	RES. 1K 1/4W 5%	1300365	21
1	R1	RES. 750 1/4W 5%	1301401	20
2	R16,R19	RES. 470 1/4W 5%	1300316	19
2	R2,R3	RES. 330 1/4W 5%	1300295	18
1	R27	RES. 100 1/4W 5%	1300229	17
A/R		GRIPLETS	1210244-0	16
2	D5,D7	DIODE IN759A 12V 5%	1110643	15
1	D4	DIODE IN748 3.9V 10%	1100121	14
1	D6	DIODE IN746A 3.3V 5%	1104860	13
3	D9,D10,D11	DIODE IN4001	1102942	12
1	D1	DIODE D670	1102162	11
1	D8	DIODE D664	1100114	10
2	C28,C29	CAP. 470PF 100V 5% DM.	1000024	9
1	C23	CAP. .15UF 35V 20% TANT	1002180	8
1	C22	CAP. 10UF 20V 10% TANT	1004813	7
1	C21	CAP. .15UF 20V 10% TANT	1004812	6
25	C1-20,25-27,30,31	CAP. .01UF 100V 20% DISC.	1001610	5
1		ETCED CIRUIT BOARD	5009714	4
		MODULE ECO HISTORY	B-MH-M7701-0-6	3
		ASSY/DRILLING HOLE LAYOUT	E-AH-M7701-0-5	2
		X-Y COORDINATE HOLE LOCATION	K-CO-M7701-0-4	1

FIRST USED ON OPTION MODEL

PARTS LIST

ETCH BOARD REV. K

IC TYPE	GND	+5V
GND AND 5V ARE USUALLY PIN 7 AND 14 RESPECTIVELY EXCEPTIONS ARE STATED ABOVE		
IC PIN LOCATIONS		

IN748 3.9V	SAME	DEC 6534D	MPS6534
IN746A 3.3V	SAME	DEC 4403	
IN4001	SAME	IN759A	SAME
D670	IN3653		
DEC6531	MPS6531		
DEC664	IN3606		
DEC2219	2N2219		
DEC NO.	EIA NO.	DEC NO.	EIA NO.

SEMICONDUCTOR CONVERSION CHART

REVISIONS: REV. N — CHANGE NO. M7701-0-0009 — CHK DALE JENSON

DRN. ROGER V. DUCETTE 10-29-71
CHK'D. NANCY MOORE 11-3-71
ENG. G. Summers 12-7-71
PROJ. ENG. Dale Jenson 1-22-72
PROD. R. Gabelein 2 1/21/72
NEXT HIGHER ASSY

SCALE
SHEET 1 OF 2

digital

TITLE DISK ENG. CONTROL + INTERLOCK

SIZE D | CODE | NUMBER M7701-0-1 | REV. N
DIST.

DEC FORM NO. DRD 135.0

This drawing and specifications, herein, are the property of Digital Equipment Corporation and shall not be reproduced or copied or used in whole or in part as the basis for the manufacture or sale of items without written permission.

HOME L ARI
LOAD SW L BDI
RUN SW L BLI
INTERLOCK L AHI
SECTOR/INDEX L BH2
CLK KILL TP LAS2

NOTE:
THIS TP WAS ADDED PER ECO 00008 FOR AUTO - MODULE TESTING ONLY AND WILL NOT BE ON ETCH REVS A THRU J

SLOW CLOCK ≈1 SEC

SPINDLE MOTOR LATCH
SPINDLE MOTOR RELAY
R/W/S READY H BJI
RUN L
START DELAY COUNTER
RUN H
RUN STROBE
DISK STOPPED COUNTER
INDEX PULSE L AJI
LOW SPEED
TIME OUT
ON SPEED FLOP
SPINDLE SPEED OK H
LOAD HEADS L BCI
+30V AC AE1
SECTOR L BK1
AC LOW
DETECT
AC LOW L AR2 AE2

+3V READY FLOP
AUI READY H
WRITE SW ON BE1
WRITE SW OFF BF1
OUTER LIMIT H AK1
SET UNSAFE L BA1
FAULT LATCH
SELECT H AS1
AVI SELECT/READY L
AMI BUS FILE READY
AN2 FAULT INDICATOR
BPI BUS WRITE CHECK
AV2 UNSAFE L
BNI READY INDICATOR
BHI NO PROTECT L
SELECT/WRITE PROTECT SET L BB1
BUI BUS WRITE PROTECT STATUS
BU2 PROTECT INDICATOR
AF1
ADI DC LOW L
AAI SAFETY RELAY
DC OK L

BVI DOOR UNLOCKING SOLENOID
ALI LOAD INDICATOR
API LOAD HEADS H

UNLESS OTHERWISE INDICATED:
PIN7 = GND
PIN14 = +5V ON ALL IC'S EXCEPT
DEC 7493 PIN5 = +5V, PIN10 = GND
DEC 74123 PIN16 = +5V, PIN8 = GND
DEC75451 PIN8 = +5V, PIN4 = GND

QTY	REF DESIGNATION	DESCRIPTION	PART NO.	ITEM NO.

PARTS LIST

ETCH BOARD REV

CHK	REVISIONS	REV	CHANGE NO.
DEC NO.	EIA NO.	DEC NO.	EIA NO.

SEMICONDUCTOR CONVERSION CHART

DRN. Roger Doucette DATE 10-29-71
CHK'D MANLY MOORE DATE 11-3-71
ENG. C.C. Simmons DATE 12-7-71
PROJ. ENGR. Kelli Allwine DATE 1-22-72
PROD. V. Mackenzie DATE 1/21/72
NEXT HIGHER ASSY
SCALE
SHEET 2 OF 2

digital EQUIPMENT CORPORATION MAYNARD, MASSACHUSETTS

TITLE RK05 CONTROL + INTERLOCK

SIZE D | CODE DCS | NUMBER M7701-0-1 | REV. N

DIST.

SHEET 2 OF 2

DEC FORM NO. DRD-135

This drawing and specifications, herein, are the property of Digital Equipment Corporation and shall not be reproduced or copied or used in whole or in part as the basis for the manufacture or sale of items without written permission.

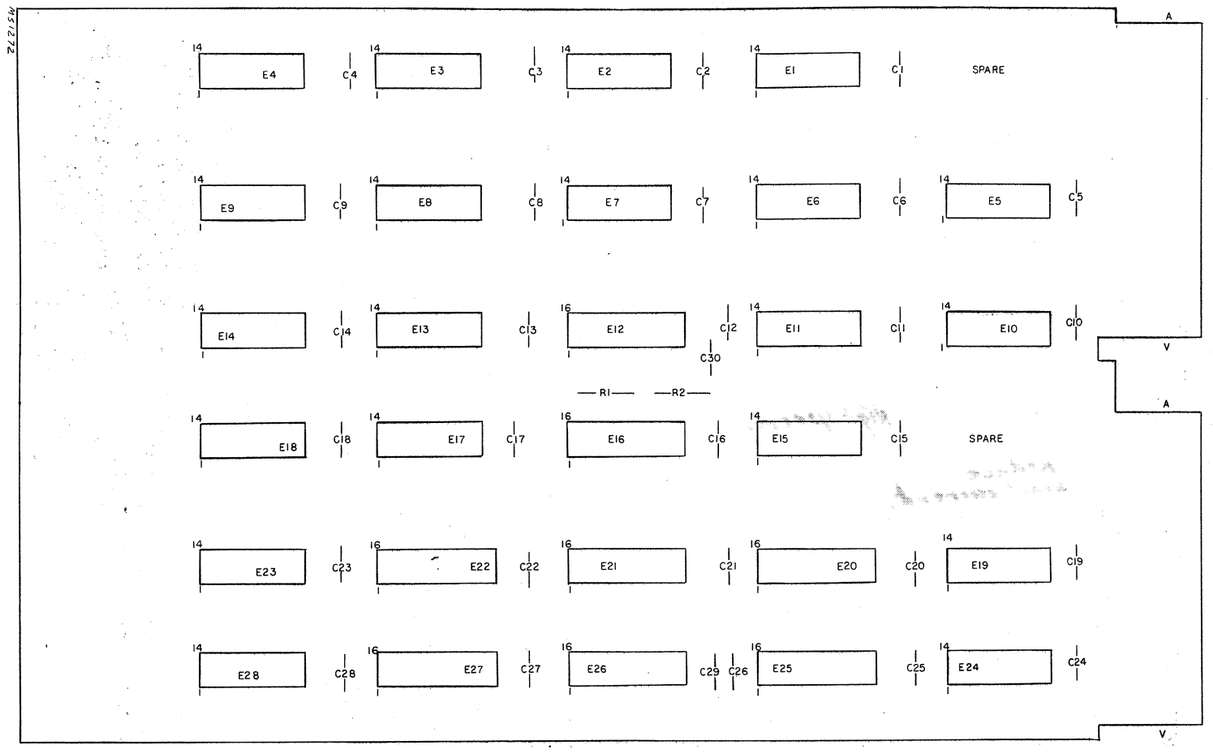

UNLESS OTHERWISE INDICATED:
PIN 8 = +5V DEC380
PIN 1 = GND
PIN 5 = +5V DEC7483
PIN12 = GND
PIN16 = +5V DEC74175
PIN8 = GND
PIN16 = +5V DEC74193
PIN8 = GND
PIN14 = +5V ALL OTHER IC'S
PIN7 = GND

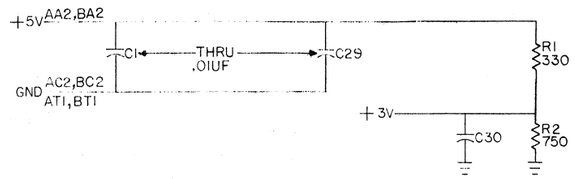

QTY	REF DESIGNATION	DESCRIPTION	PART NO.	ITEM NO.
4		EYELET #GS4-7	9006732	22
2		HANDLE, FLIP CHIP - MAGENTA	9008337-06	21
2	E20, E25	I.C. DEC 74175	1910651	20
2	E5, E17	I.C. DEC 7437	1910091	19
2	E19, E24	I.C. DEC 380	1909485	18
2	E12, E16	I.C. DEC 74193	1910018	17
2	E23, E28	I.C. DEC 7486	1910011	16
4	E21, E22, E26, E27	I.C. DEC 7483	1909932	15
2	E7. E11	I.C. DEC 7404	1909686	14
1	E1	I.C. DEC 7402	1909004	13
1	E14	I.C. DEC 7440	1905579	12
2	E15, E18	I.C. DEC 7410	1905576	11
4	E2, E6, E10, E13	I.C. DEC 7400	1905575	10
4	E3, E4, E8, E9	I.C. DEC 7474	1905547	9
1	R2	RES. 750 ¼W 5%	1301401	8
1	R1	RES. 330 ¼W 5%	1300295	7
		GRIPLET	1210244-0	6
30	C1 - C30	CAP. .01UF 100V 20% DISC	1001610	5
1		ETCHED CIRCUIT BOARD	5009710	4
		MODULE ECO HISTORY	B-MH-M7702-0-6	3
		ASSY/DRILLING HOLE LAYOUT	E-AH-M7702-0-5	2
		X-Y COORDINATE HOLE LOCATION	K-CG-M7702-0-4	1

PARTS LIST

ETCH BOARD REV C

REV	CHANGE NO.	CHK	REVISIONS
C	M7702-00001	D JENSEN	5/24/73
			5/30/73

DEC NO.	EIA NO.	DEC NO.	EIA NO.

SEMICONDUCTOR CONVERSION CHART

DRN. Roger J. Doucette DATE 11-17-71
CHK'D. [signature] DATE 11-23-71
ENG. E.R. Simmons DATE 12-16-71
PROJ. ENG. E.R. Simmons DATE 12-16-71
PROD. DATE
NEXT HIGHER ASSY
SCALE
SHEET 1 OF 2

digital EQUIPMENT CORPORATION MAYNARD MASSACHUSETTS

TITLE DEC PACK CYL ADDR AND DIFF

RK3-1

SIZE D CODE CS NUMBER M7702-0-1 REV. C

DIST.

DEC FORM NO. DRD-135

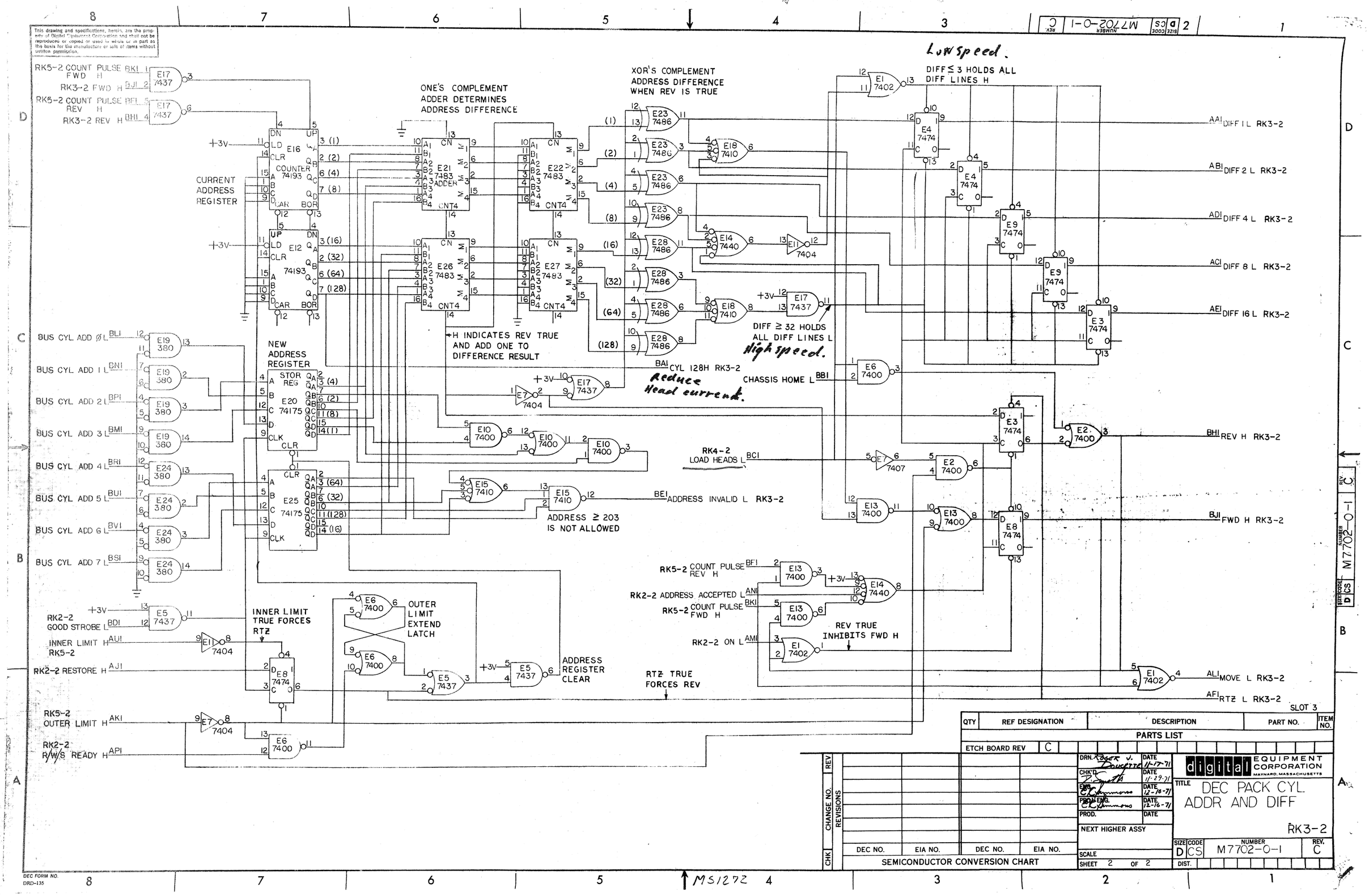

QTY	REF DESIGNATION	DESCRIPTION	PART NO.	ITEM NO.

PARTS LIST

ETCH BOARD REV C

DEC NO.	EIA NO.	DEC NO.	EIA NO.

SEMICONDUCTOR CONVERSION CHART

DRN. Roger J. Doucette DATE 11-17-71
CHK'D. [signature] DATE 11-29-71
ENG. [signature] DATE 12-16-71
PROJ. ENG. [signature] DATE 12-16-71
PROD. DATE

NEXT HIGHER ASSY

SCALE

SHEET 2 OF 2

digital EQUIPMENT CORPORATION MAYNARD, MASSACHUSETTS

TITLE DEC PACK CYL ADDR AND DIFF

RK3-2

SIZE D CODE CS NUMBER M7702-0-1 REV. C

DIST.

DEC FORM NO. DRD-135

MS1272

This drawing and specifications, herein, are the property of Digital Equipment Corporation and shall not be reproduced or copied or used in whole or in part as the basis for the manufacture or sale of items without written permission.

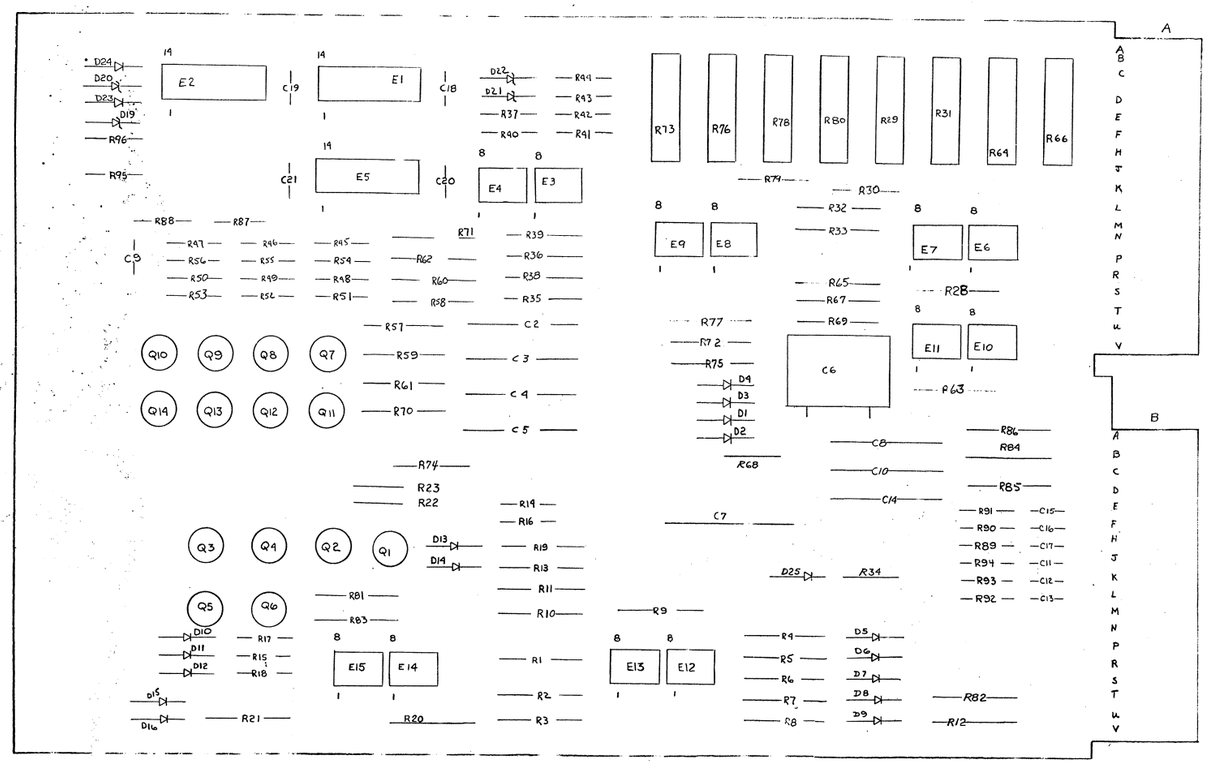

UNLESS OTHERWISE INDICATED.
PIN 14 = +5V, PIN 7 = GND ON ALL IC'S.
EXCEPT LM301 + 72741.

QTY	REF DESIGNATION	DESCRIPTION	PART NO.	ITEM NO.
3	R28, 63, 77	RES. 1.96K 1/8W 1% MF	130H833	55
1	R74	RES. 1.47 K 1/8W 1% MF	1305108	54
3	R95, 96, 34	RES. 10K ½W 5%	1300479	53
A/R		GRIPLET	12102144-0	52
2		HANDLE, PLIP CHIP - GREEN	9006337-01	51
4		EYELET #GS14-7	9006732	50
10	E6 - E15	I.C. DEC 72741	1910298	49
2	E3, E4	I.C. DEC 301	1910282	48
1	E2,	I.C. DEC 7413	1909989	47
1	E1	I.C. DEC 7404	1909686	46
1	E5	I.C. DEC 7400	1905575	45
8	Q1-4, Q11-14	TRANSISTOR 2N5245	1509681	44
6	Q5-Q10	TRANSISTOR DEC 6534D	1503409-00	43
1	R86	RES. 2.7 ½W 10%	1309444	42
1	R20	RES. 200 K 1/8W 1% MF	1305336	41
12	R10,11,32,33,35,36,38,39,67,69,81,83	RES. 19.6K 1/8W 1% MF	1309419	40
1	R7	RES. 11.5K 1/8W 1% MF	1309415	39
1	R21	RES. 3.83K 1/8W 1% MF	1309413	38
1	R75	RES. 24.3 K 1/8W 1% MF	1309418	37
5	R29, 64, 73, 76, 78	RES. 10K 3/4W 10% 76PR	1309443-10	36
3	R31, 66, 80	POT. 2K 3/4W 10% 76PR	1309443-08	35
1	R4	RES. 68.1K 1/8W 1% MF	1305252	34
1	R8	RES. 5.62K 1/8W 1% MF	1305128	33
2	R72, R12	RES. 6.81K 1/8W 1% MF	1304870	32
6	R41, R42, R23, 30, 65, 79	RES. 75R ¼W 5%	1304841	31
2	R13, R19	RES. 5.64K 1/8W 1% MF	1304856	30
5	R9, 57, 59, 61, 70,	RES. 10K 1/8W 1% MF	1303312	29
				28
1	R5	RES. 34.8K 1/8W 1% MF	1303156	27
1	R6	RES. 21.5K 1/8W 1% MF	1303155	26
1	R2	RES. 13.3 K 1/8W 1% MF	1302412	25
1	R3	RES. 309K 1/8W 1% MF	1304855	24
1	R22	RES. 100K ¼W 5%	1302466	23
5	R58, 60, R62, R71, R82	RES. 511 1/8W 1% MF	1302411	22
1	R88	RES. 750 ¼W 5%	1301401	21
7	R15, 17, 46, 49, 52, 55, 1	RES. 15K ¼W 5%	1300496	20
5	R18, R47, R50, 53, 56	RES. 3.9K ¼W 5%	1300444	19
9	R14, 16, 43, 44, 45, 40, 51, 54, 68	RES. 1.5K ¼W 5%	1300391	18
3	R37, 40, 87	RES. 330 ¼W 5%	1300295	17
6	R89-94	RES. 22 ¼W 10%	1300188	16
2	R84, R85	RES. 10 ¼W 5%	1300168	15
2	D15, D16	DIODE 1N758A 10V	1100125	14
4	D19 - 22	DIODE 1N746A	1104860	13
10	D5 - 14	DIODE D664	1100114	12
7	D1 - D4, 25, 23, 24	DIODE D662	1100113	11
1	C7	CAP. .022 UF 100V 10% MYLAR	1002323	10
1	C6	CAP. 2700 pf 100V MICA	1001637	9
3	C8, 10, 14	CAP. 15UF 20V 10% S.TANT	1001812	8
11	C9, 11, 12, 13, 15-21	CAP. .01UF 100V 20% DISC	1001610	7
				6
4	C2, 3, 4, 5	CAP. .015UF 50V 2% POLY CARB	1010646	5
1		ETCHED CIRCUIT BOARD	5009388	4
		MODULE ECO HISTORY	B-MH-G938-0-6	3
		ASSY/DRILLING HOLE LAYOUT	E-AH-G938-0-5	2
		X-Y COORDINATE HOLE LOCATION	K-CO-G938-0-4	1

PARTS LIST

ETCH BOARD REV K

REVISIONS	CHANGE NO.	CHK
Added C15 thru C18 per ECO. D. JENSEN 8-3-72	G938-00006	IL
Changed R84 from 1K to 10K per ECO. D. JENSEN 12-29-72	G938-00005	K
Added R86 per ECO. D. JENSEN 11-9-72	G938-00004	J
Changed R84 from 10K to 1K per ECO. D. JENSEN 8-9-72	G938-00003	H
Added C19 thru C21 per ECO. D. JENSEN 3-20-72		
Changed R84 from 1K to 10K per ECO. ROGER J. DAUCETTE	G938-00002	F
Added R84 per ECO. Mark A. Jensen 3-6-72		

DEC NO.	EIA NO.	DEC NO.	EIA NO.
6534D	NONE		
2N5245			
D662	IN645		
D664	IN3606		
IN746A	SAME		

SEMICONDUCTOR CONVERSION CHART

DRN. Roger J. Daucette DATE 12-8-71
CHK'D. DATE 12-9-71
ENG. Dale Jensen DATE 30 Dec 71
PROJ. ENG. Dale Jensen DATE 30 Dec 71
PROD. A. Kalbacz DATE 3/6/72
NEXT HIGHER ASSY
SCALE
SHEET 1 OF 2

digital EQUIPMENT CORPORATION MAYNARD MASSACHUSETTS

TITLE DEC PACK HEAD POSITION. SERVO PREAMP RK5-1

SIZE D | CODE CS | NUMBER G938-0-1 | REV. L

DIST.

DEC FORM NO. DRD-135

This drawing and specifications, herein, are the property of Digital Equipment Corporation and shall not be reproduced or copied or used in whole or in part as the basis for the manufacture or sale of items without written permission.

D TO A CONVERTER

RK3-2 DIFF 1 L BN2 D5 DGG4 R4 68.1K
RK3-2 DIFF 2 L BP2 D6 DGG4 R5 34.8K
RK3-2 DIFF 4 L BR2 D7 DGG4 R6 21.5K
RK3-2 DIFF 8 L BS2 D8 DGG4 R7 11.5K
RK3-2 DIFF 16 L BT2 D9 DGG4 R8 5.62K

R34 10K 1/4W +15F

REFERENCE D25 D662 R1 15K 1/4W R2 13.3K R3 9.09K VA R76 10K 1/4W
D1 DGG2 D2 DGG2 D3 DGG2 D4 DGG2 R68 1.5K 1/4W

R9 10K
E12 72741 VELOCITY GENERATOR
R13 4.64K

TP1 BM2 R10 19.6K R11 19.6K BL2 TP12
E13 72741 INVERTER
R19 4.64K D13 DGG4 D14 DGG4

TP FWD 2N5245 Q1 Q2 2N5245
R20 200K
E14 72741 PREAMP
R21 3.83K

LIMITERS IN758A 10V D15 D16
R12 6.81K R82 511
BU2 RK5-2 POWER AMP DRIVE .7V P-P

RK3-2 FWD H BJ2 R14 1.5K 1/4W
RK3-2 REV H BK2 R16 1.5K 1/4W
R15 15K 1/4W G534D Q5 G534D Q6
R17 15K 1/4W
D10 DGG4 D11 DGG4 D12 DGG4 TP REV
R18 3.9K, 1/4W -15F

2N5245 Q3 Q4 2N5245
R22 100K, 1/4W BF1 TP9
R23 75K 1/4W
POSITION SIGNAL

SIN POSITION TP-10VP-P
CHASSIS SIN POSITION AN1
E6 72741 R28 1.96K R29 10K 3/4W R30 75K 1/4W R31 2K 3/4W SO SA -15A
TP2 AM1

45° LAG R35 19.6K R36 19.6K
E4 DEC301 R42 75K 1/4W R37 330 1/4W
OVER DRIVEN AMP

TP6 AF1 D21 IN746A D22 IN746A R43 1.5K 1/4W R44 1.5K 1/4W
E1 7404 E1 7404

R45 1.5K 1/4W R48 1.5K 1/4W R51 1.5K 1/4W R54 1.5K 1/4W
E5 7400 E5 7400 E5 7400 E5 7400

R46 15K 1/4W R47 3.9K, 1/4W G534D Q10
R49 15K 1/4W R50 3.9K, 1/4W G534D Q9
R52 15K 1/4W R53 3.9K
R55 15K 1/4W R56 3.9K, 1/4W G534D Q7

COS POSITION TP-10VP-P
CHASSIS -COS POSITION AU1
E10 72741 R63 1.96K R64 10K 3/4W R65 75K 1/4W R66 2K 3/4W CO CA -15A
TP4 AS1

CHASSIS AK1
LIMIT +5mV OUT L -5mV in L or between
C7 .022 UF R77 1.96K R78 10K 3/4W LSO -15B R79 75K 1/4W R80 2K 3/4W LSA
E8 72741
LIMITS TP AJ1 TP10

TACHOMETER AMP
CG 2700 pf R75 24.3K R73 10K 3/4W VO R72 6.81K
E9 72741
TP8 AH1 VELOCITY TP
R74 1.47K
R83 19.6K R61 19.6K
E15 72741 INVERTER
BY2 TP11

ALI TP3 R32 19.6K R33 19.6K
E7 72741 INVERTER
R38 19.6K R39 19.6K 45° LEAD R40 330 1/4W
E3 DEC301 R41 75K 1/4W
AE1 TP7

ARI TP5 RG7 19.6K RG8 19.6K
E11 72741 INVERTER

C2 .015UF R57 10K R58 511
C3 .015UF R59 10K RG0 511
C4 .015UF RG1 10K RG2 511
C5 .015UF R70 10K R71 511
DIFFERENTIATORS

TP+SO 2N5245 Q14
TP-SO 2N5245 Q13
TP-CO 2N5245 Q12
TP+CO 2N5245 Q11
SAMPLING FET'S

FWD	SEEK
ORDER	ON FET
1	Q13
2	Q11
3	Q14
4	Q12

NOTE:
IN746A ZENER DIODES ARE 3.3V UNLESS OTHERWISE INDICATED:
RESISTORS ARE 1/8W

RK5-2 13 E1 12 7404 AA1 COUNT PULSE FWD H
RK5-2 9 E1 8 7404 AC1 COUNT PULSE REV H
RK5-2 E1 2 7404 AD1 OUTER LIMIT H
RK5-2 E1 10 7404 AB1 INNER LIMIT H

+3V
D23 D662 R95 10K D19 IN746A -15F
D24, D662 R96 10K D20 IN746A -15F
E2 7413 E2 7413
SCHMITT TRIGGER

AC2, AT1, BC2, BT1 C18 THRU .01UF C21 GND
+5V BA2 R86 2.7 1/2W C8 15UF +5F
R87 330 1/4W R88 750 1/4W C9 .01UF +3V
-15V BB2 R84 10 1/2W C10 15UF -15F
R94 22 1/4W C11 .01UF -15A
R93 22 1/4W C12 .01UF -15B
R92 22 1/4W C13 .01UF -15C
+15V BD2 R85 10 1/2W C14 15UF +15F
R91 22 1/4W C15 .01UF +15A
R90 22 1/4W C16 .01UF +15B
R89 22 1/4W C17 .01UF +15C

SEMICONDUCTOR CONVERSION CHART

DEC NO.	EIA NO.	DEC NO.	EIA NO.

REVISIONS: REV | CHANGE NO. | CHK

QTY	REF DESIGNATION	DESCRIPTION	PART NO.	ITEM NO.

PARTS LIST

DRN. Roger V. Bucette DATE 12-8-71
CHKD. M Wall DATE 8-9-71
ENG. Dale Jansen DATE 30 Dec 71
PROJ. ENG. Dale Jansen DATE 30 Dec 71
PROD. J. Rabbitt DATE 01/30/72
NEXT HIGHER ASSY
SCALE
SHEET 2 OF 2

digital EQUIPMENT CORPORATION MAYNARD, MASSACHUSETTS

TITLE DEC PACK HEAD POSITION SERVO PREAMP RK5-2

SIZE D CODE CS NUMBER G938-0-1 REV. L
DIST.

SLOT 5

DEC FORM NO. DRD-135

THIS SCHEMATIC IS FURNISHED ONLY FOR TEST AND MAINTENANCE PURPOSES. THE CIRCUITS ARE PROPRIETARY IN NATURE AND SHOULD BE TREATED ACCORDINGLY.
COPYRIGHT 1971 BY DIGITAL EQUIPMENT CORPORATION

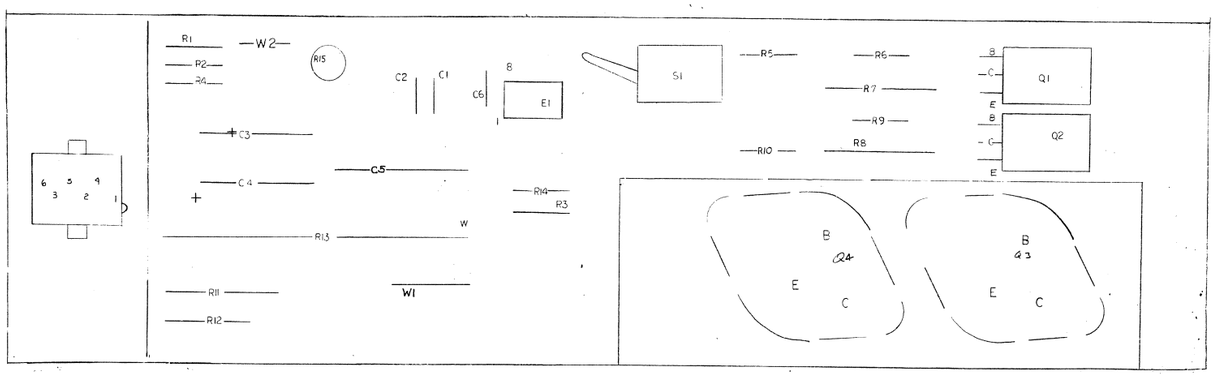

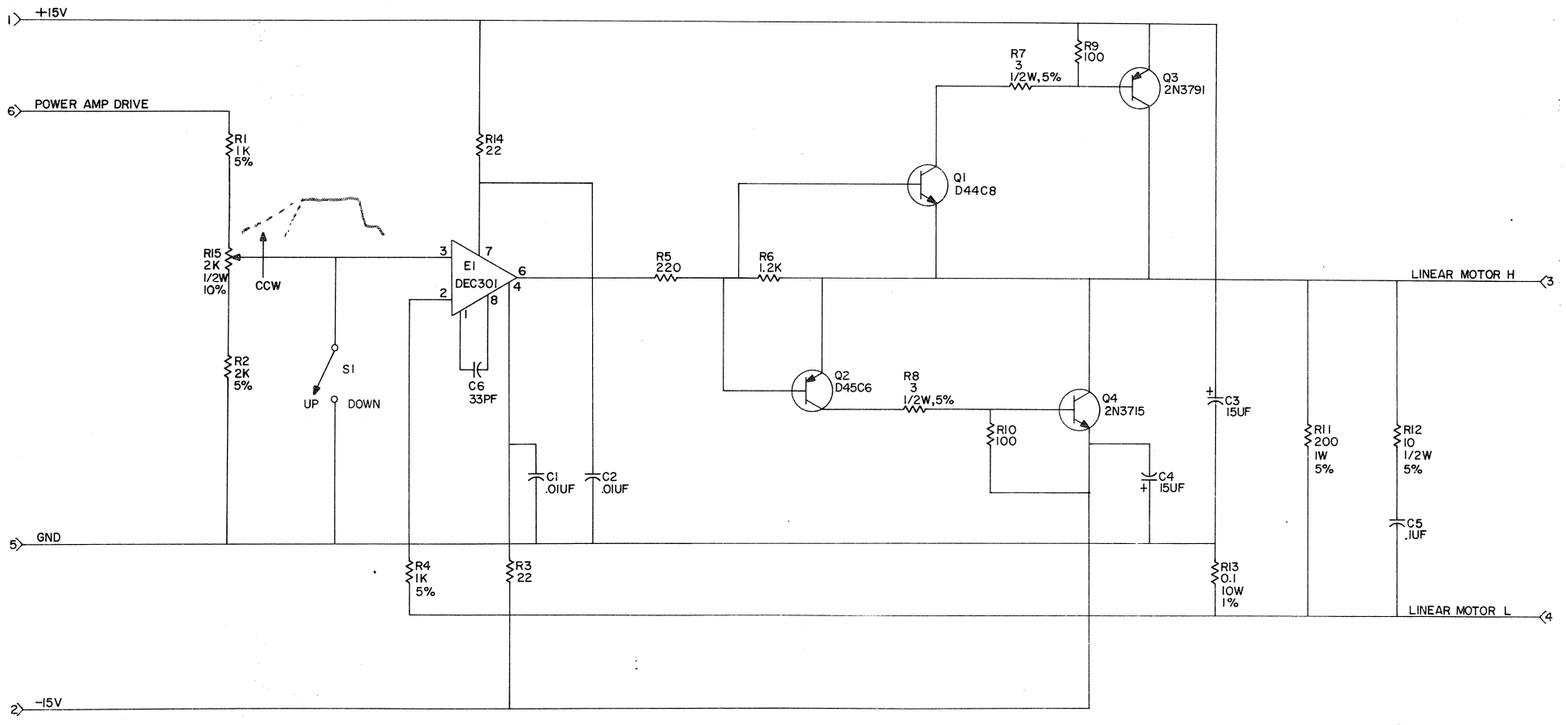

UNLESS OTHERWISE INDICATED:
RES. ARE 1/4W, 10%
R13 IS A CURRENT SAMPLING RES.

REVISIONS				
CHK	CHG NO	REV		
	00001	F	D. Jensen	14-Jul-71
	00002	H	D. JENSEN	11-Aug-71
	00003	J	D. JENSEN	19-Jan-73

DRN	B. Steele	DATE 11/24/71
CHK'D		DATE
ENG	Jack T Jensen	DATE 10 Jan 72
PROD		DATE

TRANSISTOR & DIODE CONVERSION CHART

DEC	EIA	DEC	EIA
2N3715			
D45C6			
D44C8			

digital EQUIPMENT CORPORATION MAYNARD, MASSACHUSETTS

TITLE DECPAK HEAD POS. SERVO PWR. AMP.

SIZE	CODE	NUMBER	REV
D	CS	H604-0-1	

PRINTED CIRCUIT REV J

SIZE D | CODE CS | NUMBER H604-0-1 | REV J

DEC FORM NO.
DRD 118

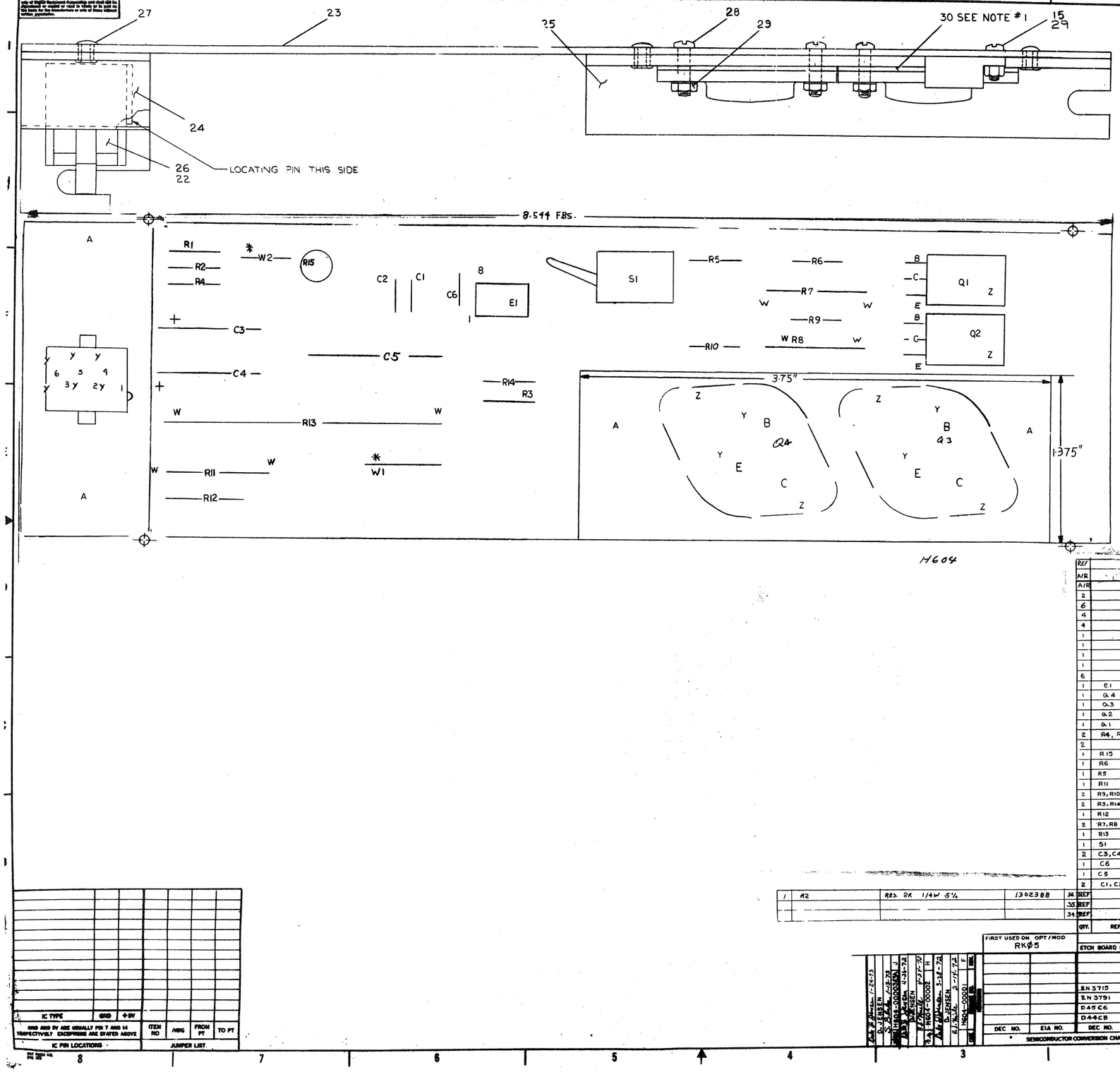

NOTES:

1. APPLY ITEM NO 31 (THERMAL JOINT COMPOUND) BETWEEN TRANSISTORS (Q.3 & Q.4) AND ITEM NO 30 (WASHER), ALSO BETWEEN ITEM NO 30 (WASHER) AND ITEM NO 25 (BRACKET, HEAT SINK).

REF				
		ASSY-HOLE DRILLING LAYOUT	D-AH-H604-0-0	33
A/R	*	#22 AWG JUMPER WIRE	9107560-01	32
A/R		COMPOUND THERMAL JOINT	9008268	31
2		INSULATOR WASHER	9006721	30
6		KEP NUT 4-40	9006557	29
4		SCR. BINDER HD, SLOTTED #4-40X.44	9006012-4	28
4		EYELET .1210D X .219LG	9006732	27
1	HOUSING	6 PIN MATE-N-LOCK	1209350-06	26
1		BRACKET, HEAT SINK	C-MD-5509810-0-0	25
1		BRACKET, SERVO BOARD	C-MD-5509812-0-0	24
1		ETCHED CIRCUIT BOARD	9009741	23
6		PINS FOR MATE-N-LOCK	1209456	22
1	E1	I C LM301	1910282	21
1	Q.4	TRANS 2N3715	1503068	20
1	Q.3	TRANS 2N3791	1509581	19
1	Q.2	TRANS DEC D45C6	1510414	18
1	Q.1	TRANS DEC D44C8 OR TIP 31A	1510421	17
2	R4, R1	RES 1K, .25W, 5%	1300365	16
2		SCREW, 4-40X1/4 BINDER HD, SLOTTED	9006009-4	15
1	R15	POT 2K 1/2 W 10% 62 PR	1309410	14
1	R6	RES 1.2K, .25 W, 10%	1300386	13
1	R5	RES 220, .25W 10%	1300275	12
1	R11	RES 200, 1W, 5%	1302382	11
2	R9, R10	RES 100, .25W, 10%	1300231	10
2	R3, R14	RES 22, .25W, 10%	1300188	9
1	R12	RES 10, .5W, 5%	1300168	8
2	R7, R8	RES 3, .5 W, 5%	1301643	7
1	R13	RES .1, 10W, 1%	1309108	6
1	S1	SWITCH, TOGGL T-8001	1210209	5
2	C3, C4	CAP 15 UF, 20V, 10%	1004812	4
1	C6	CAP 33 PF, 100V, 5%	1000009	3
1	C5	CAP .1UF, 100V, 10%	1002342	2
2	C1, C2	CAP .01UF, 100V, 20%	1001610	1
		MODULE ECO HISTORY	B-MH-H604-0-6	
		X-Y CO-ORDINATE HOLE LOCATION	K-CO-H604-0-4	
		CIRCUIT SCHEMATIC	D-CS-H604-0-1	
QTY.	REF DESIGNATION	DESCRIPTION	PART NO.	ITEM NO.

PARTS LIST

1	R2	RES. 2K 1/4W 5%	1302388	36 REF
				35 REF
				34 REF

IC TYPE	GND	+5V
GND AND 5V ARE USUALLY PIN 7 AND 14 RESPECTIVELY EXCEPTIONS ARE STATED ABOVE		

IC PIN LOCATIONS

ITEM NO	AWG	FROM PT	TO PT

JUMPER LIST

FIRST USED ON OPT/MOD
RKØ5

DEC NO.	EIA NO.

SEMICONDUCTOR CONVERSION CHART

DEC NO.	EIA NO.
2N3715	—
2N3791	—
D45C6	—
D44C8	—

ETCH BOARD REV J

NEXT HIGHER ASSY: D-UA-RK05-0-0

SIZE A1 SHEET 1 OF

DRAWN R. Head 10/31/71
CHECKED J. Kilgus 11-7-71
ENG APPR. [illegible] 11-8-71
MFG APPR. [illegible] 11-8-71
QA [illegible] 11/8/71

[redacted] EQUIPMENT CORPORATION

TITLE: HEAD POSITION SERVO POWER AMP

DRAWING NO. E UA H6Ø4-Ø-Ø REV. J

DIST. G

REVISIONS				
1	1-24-72	J. KILGUS	H604-00003	J
2	4-13-72	J. KILGUS	H604-00004	K
3	5-22-72	J. KILGUS	H604-00002	L
4	6-1-72	J. KILGUS	H604-00001	M
5	7-17-72	J. KILGUS		N

THIS SCHEMATIC IS FURNISHED ONLY FOR TEST AND MAINTENANCE PURPOSES. THE CIRCUITS ARE PROPRIETARY IN NATURE AND SHOULD BE TREATED ACCORDINGLY.
COPYRIGHT 1971 BY DIGITAL EQUIPMENT CORPORATION

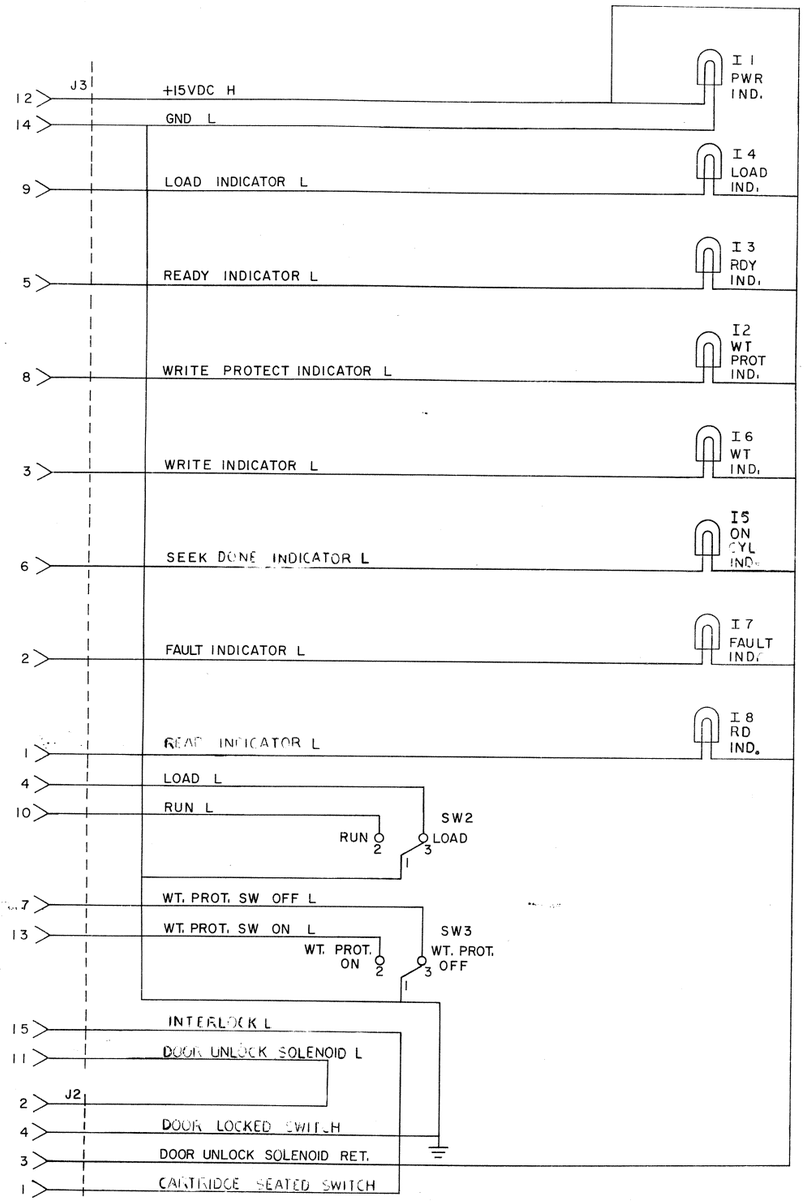

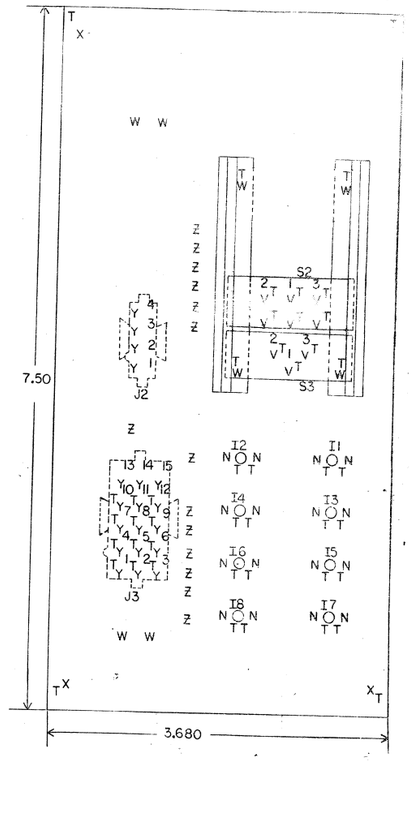

REVISIONS			
CHK	CHG NO	REV.	
D	100201	B	
D	TEN EN		
	100002	C	

DRN. S. COOPER	DATE 11-20-71	
CHK'D	DATE	
ENG. Dick Jensen	DATE 19 Dec 71	
PROD.	DATE	

TRANSISTOR & DIODE CONVERSION CHART			
DEC	EIA	DEC	EIA

digital EQUIPMENT CORPORATION

TITLE RK05 CONTROL PANEL

RK7-1

SIZE	CODE	NUMBER	REV.
C	CS	5409698-0-1	D

DEC FORM NO. DRC 102

SIZE	CODE	NUMBER	REV.
C	CS	5409698-0-1	D

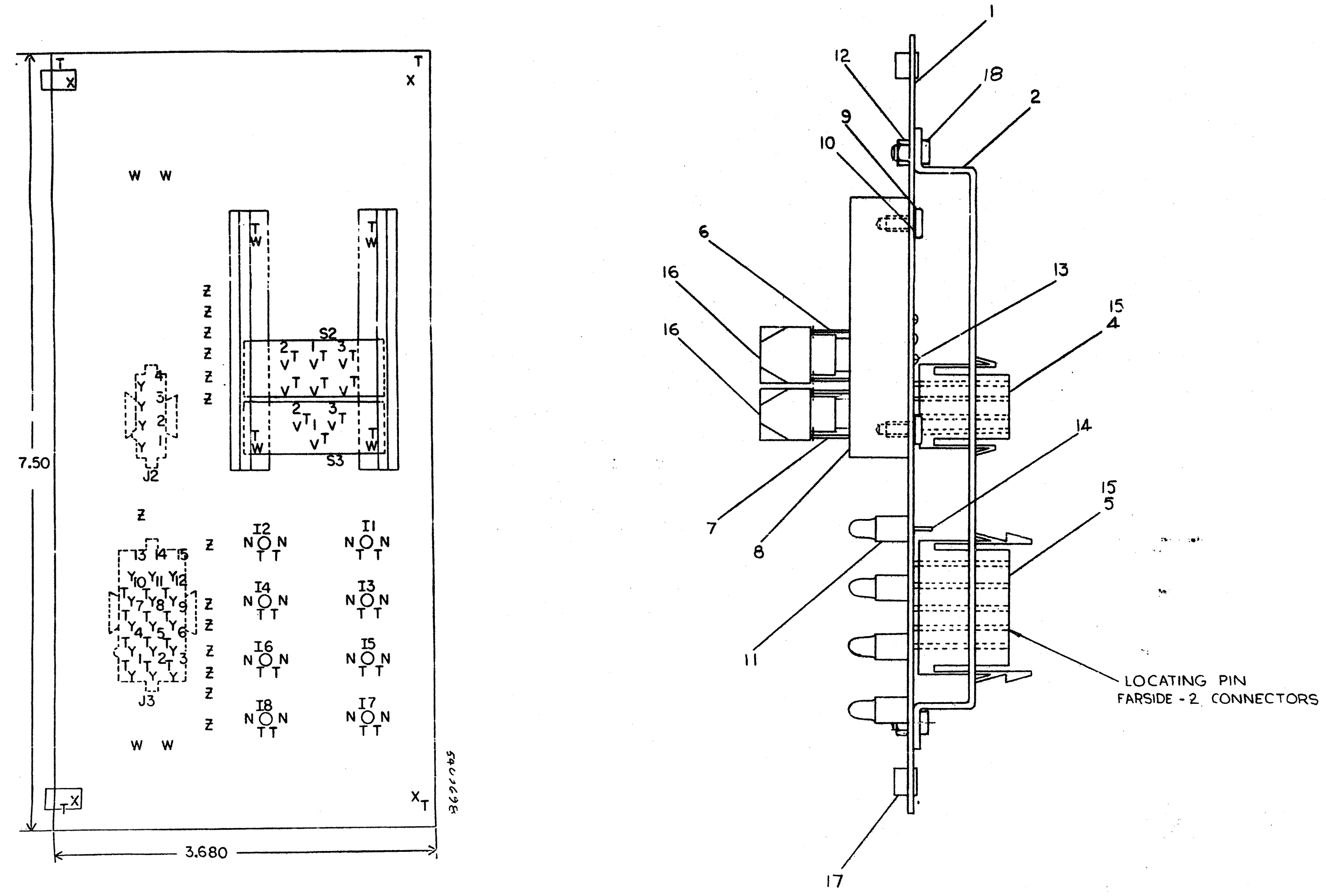

REF		ASSY/DRILLING HOLE LAYOUT	D-AH-5409699-0-5	19
4		SCR, PHL PAN HD #4-40×5/16 LG	9006010-1	18
4		NUT CLIP #6-32	9008423	17
2		SWITCH BUTTON	1205317-07	16
19		PIN SOCKET MATE-N-LOCK	1209456	15
16		TERMINAL SOLDERLESS	9007812	14
16	Z	EYELET FEED THROUGH	9006731	13
4		NUT KEPS #4-40	9006557	12
8	I1,I2,I3,I4,I5,I6,I7,I8	LAMP	1209169	11
4		LOCK WASHER INTERNAL 6-32	9006633	10
4		SCREW PHL PAN HEAD 6-32X5/16 LG	9006021-1	9
2		SWITCH MOUNTING BAR	B-MD-5509830-0-0	8
1	S3	SWITCH, ROCKER	1205375	7
1	S2	SWITCH, ROCKER	1205941	6
1	J3	HOUSING, SOCKET MATE-N-LOCK 15 PIN	1209350-15	5
1	J2	HOUSING, SOCKET MATE-N-LOCK 4 PIN	1209350-04	4
				3
1		CONNECTOR BRACKET	C-MD-5509829-0-0	2
1		ETCHED CIRCUIT BOARD	5009697	1
REF		MODULE ECO HISTORY	B-MH-5409698-0-6	
REF		X-Y CO-ORDINATE HOLE LOCATION	K-CO-5409698-0-4	
REF		CIRCUIT SCHEMATIC	C-CS-5409698-0-1	
QTY.	REF DESIGNATION	DESCRIPTION	PART NO.	ITEM NO.

PARTS LIST

FIRST USED ON OPT/MOD: RKØ5

ETCH BOARD REV: D

[redacted] EQUIPMENT CORPORATION
MAYNARD, MASSACHUSETTS

TITLE: RK7-2
CONTROL PANEL
(RKØ5)

E IA 5409698-0-0 REV D

SCALE 2/1 SHEET 1 OF 1

DEC NO. | EIA NO. | DEC NO. | EIA NO.
SEMICONDUCTOR CONVERSION CHART

IC TYPE | GND | +5V
GND AND 5V ARE USUALLY PIN 7 AND 14 RESPECTIVELY EXCEPTIONS ARE STATED ABOVE
IC PIN LOCATIONS

ITEM NO | AWG | FROM PT | TO PT
JUMPER LIST

This drawing and specifications, herein, are the property of Digital Equipment Corporation and shall not be reproduced or copied or used in whole or in part as the basis for the manufacture or sale of items without written permission.

NOTE:
1. RELAY CONTACTS ARE SHOWN IN THE DE-ENERGIZED POSITIONS.
2. SAFETY RELAY L AND BLOWER MTR RELAY DR ARE THE SAME SIGNAL.
3. SPINDLE MOTOR RELAY L AND DISK RELAY DR ARE THE SAME SIGNAL.

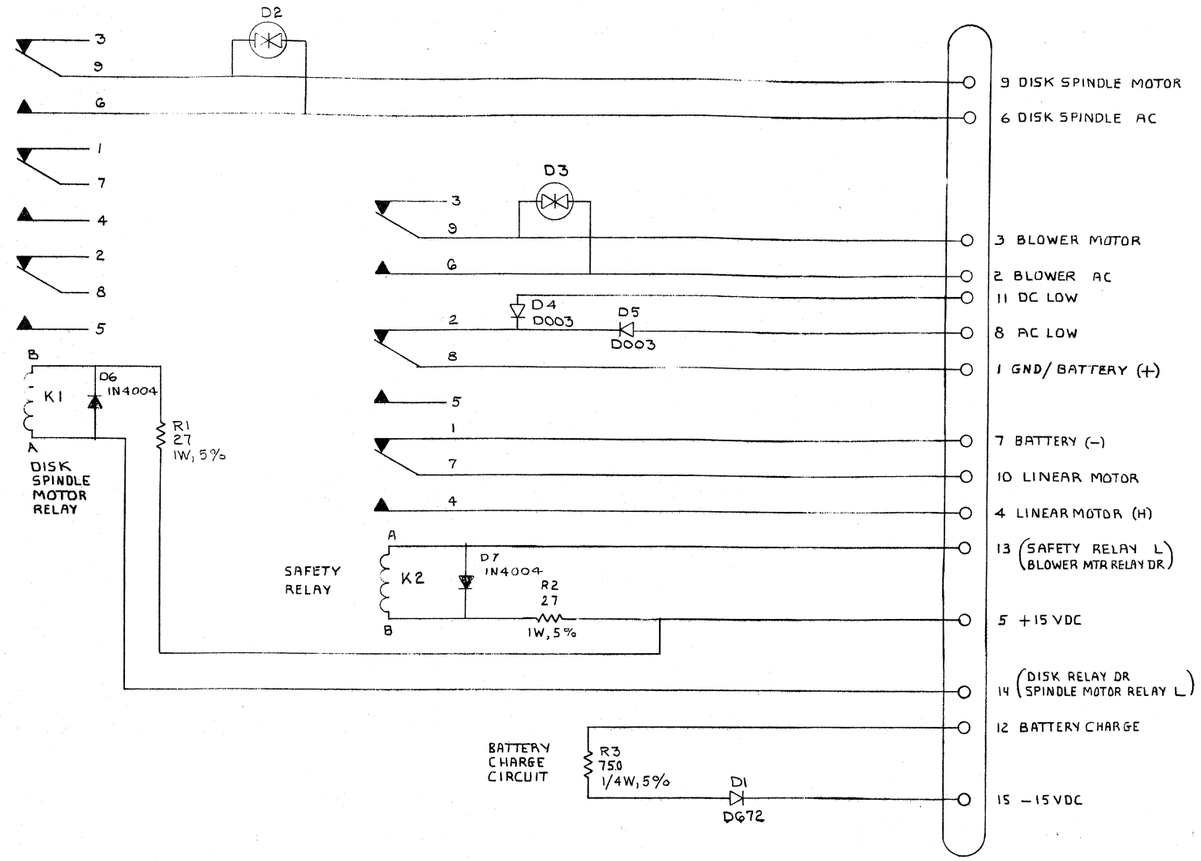

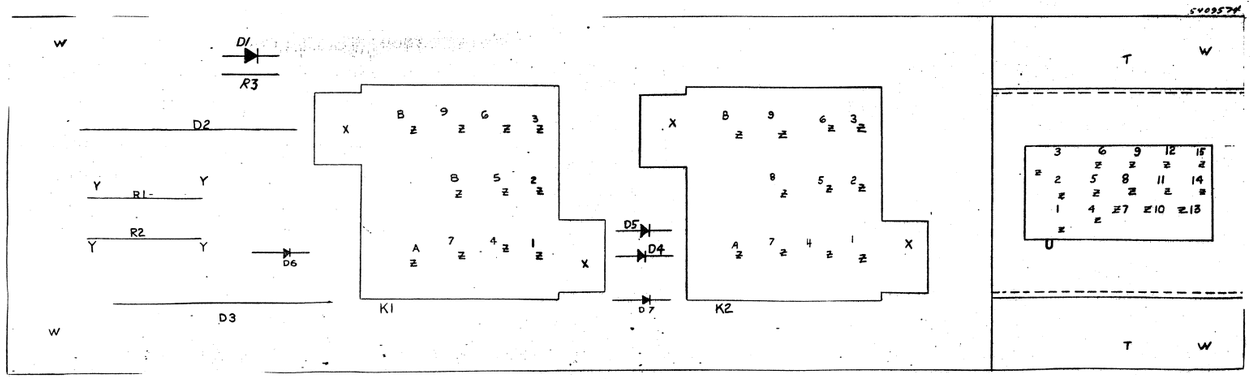

QTY	REF DESIGNATION	DESCRIPTION	PART NO.	ITEM NO.

PARTS LIST

ETCH BOARD REV F

DEC NO.	EIA NO.	DEC NO.	EIA NO.
D003	IN994		
D672	IN3653		

SEMICONDUCTOR CONVERSION CHART

REVISIONS

CHK	CHANGE NO.	REV
N. Field 4/4/75		
N. FIELD	Roy Vanegas 2/13/75	F
	5409574-00002	F
	Dale E. Jensen 2-20-73	
D. JENSEN	H. Demarrie 2/15/73	
	5409574-00001	E

DRN. Roger J Doucette DATE 12-9-71
CHK'D. J. E. Quinn DATE 12-15-71
ENG. Dale J. Jensen DATE 10 Jan 72
PROJ. ENG. Dale J. Jensen DATE 10 Jan 72
PROD. DATE

NEXT HIGHER ASSY

SCALE

SHEET 1 OF

digital EQUIPMENT CORPORATION MAYNARD, MASSACHUSETTS

TITLE DEC PACK MOTOR RELAYS

SIZE D CODE CS NUMBER 5409574-0-1 REV. F

DIST.

DEC FORM NO. DRD-135

This drawing and specifications, herein, are the property of Digital Equipment Corporation and shall not be reproduced or copied or used in whole or in part as the basis for the manufacture or sale of items without written permission.

5409574

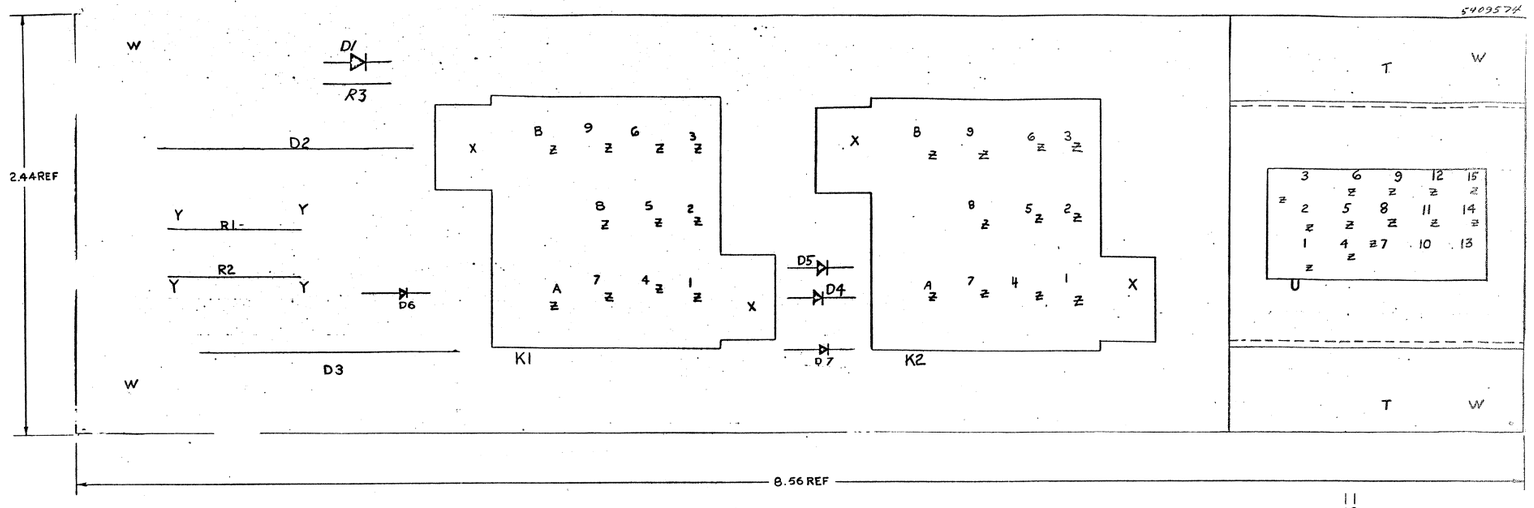

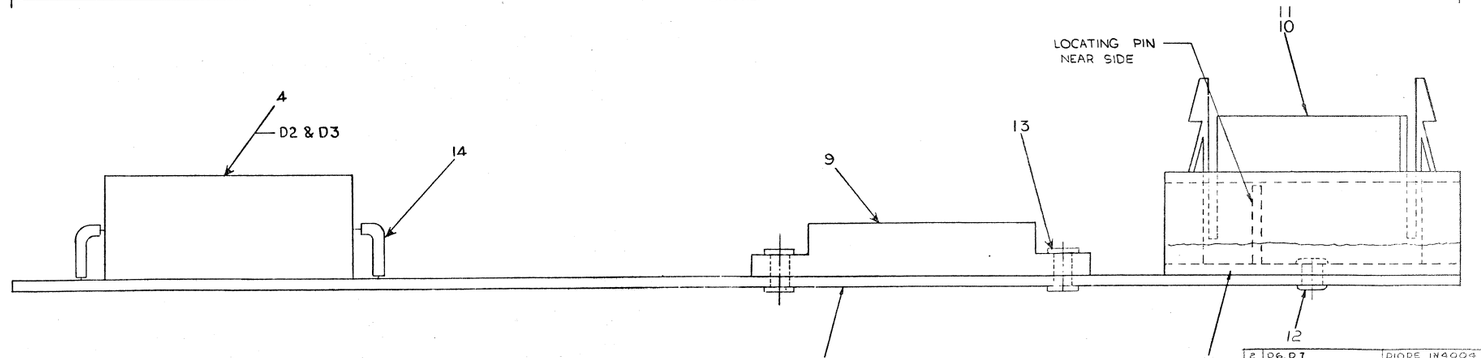

QTY.	REF. DESIGNATION	DESCRIPTION	PART NO.	ITEM NO.
2	D6, D7	DIODE IN4004	1105796	16
REF		ASSY HOLE DRILLING LAYOUT	DWG 5409574	15
AR		TUBING 18AWG TEFLON	3107278-11	14
4		EYELET GS4-9	5007746	13
2		EYELET .121 ODX.219 LG	5006772	12
15		PINS FOR MATE-N-LOCK	12094560	11
1		15 PIN MATE-N-LOCK	12093715	10
2		RELAY SOCKET	1210884	9
2	K1 K2	RELAY P&B T171D1000	1206454	8
2	R1 R2	RESISTOR 27 1W 5%	1301516	7
1	R3	RESISTOR 750 1/4W 5%	1301401	6
1	D1	DIODE D672	1105275	5
2	D2, D3	DIODE SEMTECH 1N5204B	1100106	4
2	D4, D5	DIODE GER 1003	1100100	3
1		ETCHED CIRCUIT BOARD	5009573	2
REF		MODULE ECO HISTORY	SMH-[illegible]-MC6	1
1		BRACKET MOTOR RELAY	5409556-01-A	1
REF		X Y COORD HOLE LOCAT	DWG 5409574	
REF		CIRCUIT SCHEMATIC	DWG 5409571	

PARTS LIST

CAUTION
CHANGE COULD AFFECT U.L. LISTING

FIRST USED ON
RK05

ETCH BOARD REV F

DEC NO.	EIA NO.	DEC NO.	EIA NO.
		D-672	IN3653
		D-207	IN914

SEMICONDUCTOR CONVERSION CHART

IC TYPE	GND	+5V
GND AND 5V ARE USUALLY PIN 7 AND 14 RESPECTFULLY. EXCEPTIONS ARE STATED ABOVE		

IC PIN LOCATIONS

ITEM NO	AWG	FROM PT	TO PT

JUMPER LIST

REV	DESCRIPTION	CHG NO	DATE	APPROVED
E	ENGINEERING RELEASE	5409574	12-1-73	JOHNSEN
F	ADD VOLTAGE SHIFTER	5409574	11-21-73	JOHNSEN

DRN R. HAYES 12-27-73
CHK D. VOGEL 12-27-73
ENG D. JOHNSEN 12-27-73
MGR
PROJ

DIGITAL EQUIPMENT CORPORATION

TITLE
DECPACK
MOTOR RELAYS

D-UA-RK05-0-0

SCALE 4:1
SHEET 1 OF 1

EIA 5409574-0-0 REV F

UNLESS OTHERWISE SPECIFIED DIMENSIONS ARE IN INCHES
TOLERANCES ON FRACTIONS ± 1/64
DECIMALS .X ± .1 .XX ± .02 .XXX ± .005
ANGLES ± 1°
FINISH
MATERIAL
DO NOT SCALE DRAWING

DEC FORM 240 MD

8 7 6 5 4 3 2 1

This drawing and specifications, herein, are the property of Digital Equipment Corporation and shall not be reproduced or copied or used in whole or in part as the basis for the manufacture or sale of items without written permission.

NOTES:
1. SAFETY RELAY L AND BLOWER MTR RELAY DR ARE THE SAME SIGNAL.
2. SPINDLE MOTOR RELAY L AND DISK RELAY DR ARE THE SAME SIGNAL.

INTERFACE CABLE

CONTROLLER

FILE READY
HEAD SELECT L
WRITE PROTECT STATUS L
ERASE GATE
WRITE CHECK L
SEEK INCOMPLETE
R/W/S READY L
WRITE GATE L
STROBE L
SELECT ØL
ADDRESS INVALID
SELECT 1 L
ADDRESS ACCEPTED L
SELECT 2L
READ CLOCK
READ DATA
SELECT 3 L
WRITE DATA AND CLOCK L
SECTOR PULSE L
CYLINDER ADDRESS ØL
CYLINDER ADDRESS 1L
CYLINDER ADDRESS 2L
CYLINDER ADDRESS 3L
CYLINDER ADDRESS 4L
CYLINDER ADDRESS 5L
CYLINDER ADDRESS 6L
CYLINDER ADDRESS 7L
INDEX PULSE L
SECTOR ADDRESS ØL
SECTOR ADDRESS 1L
SECTOR ADDRESS 2L
SECTOR ADDRESS 3L
WRITE PROTECT SET L
RESTORE L
READ GATE L
AC LOW
DC LOW
HIGH DENSITY L

LOGIC ASSEMBLY

A06 J1 GRN
A06 H1 ORN/BLK
A06 E1 RED/WHT
A06 K1 GRN/BLK
A06 B1 BLK/WHT
A06 F1 ORN
A06 N1 BLU/BLK
A06 C1 RED
A06 A1 BLK
A06 L1 GRN/WHT
A06 P1 BLU/WHT
A06 D1 RED/BLK
A06 M1 BLU
A06 T1 WHT/BLK
A06 R1 WHT

B06 B1 BLK/WHT
B06 E1 RED/WHT
B06 D1 RED/BLK
B06 J1 GRN
B06 H1 ORN/BLK
B06 S1 WHT
B06 F1 ORN
B06 A1 BLK
B06 C1 RED

CONTROL PANEL

READ IND 1
FAULT IND 2
WRITE IND 3
LOAD SW L 4
READY IND 5
SEEK DONE (ONCYL) 6
WRITE PROT SW OFF 7
WRITE PROT IND 8
LOAD IND 9
RUN SW L 10
DOOR UNLOCK SOLENOID L 11
+15V 12
WRITE PROT SW ON 13
GND 14
INTERLOCK L 15

DOOR UNLOCK SOLENOID
WHT
WHT
CARTRIDGE SEATED
GRY/ORN
GRY/YEL
J2
DOOR LOCKED
GRY/RED
SW1
SW2

TB2

B06 K1	GRN/BLK	3	ORN
B06 L1	GRN/WHT	1	BLU
B06 T1	WHT/BLK	2	WHT
B06 M1	BLU	5	GRY
B06 N1	BLU/BLK	6	VIO
B06 P1	BLU/WHT	4	YEL
BLK		7	BLK/WHT
		8	ORN/WHT
		9	BLK

COS H	3	GRN
COS L	4	ORN
SIN H	1	BLU
SIN L	2	YEL
LIMIT H	5	GRY
LIMIT L	6	BRN
HOME L	7	
+5 BULB	9	WHT/RED OR WHT
GND	8	WHT/BLK OR WHT

TB1

LINEAR TRANSDUCER

RED

POWER SECTOR TRANSDUCER
SECTOR INDEX RAW
GROUND
GROUND
BATTERY (-)
BATTERY (-)

ORN
BLU
RED DOT
BLK DOT
LED
WHT
SECTOR TRANSDUCER

LINEAR MOTOR
POSITIONER COIL
HEADS
MAGNET AND HOUSING
ORN/WHT NC1
NO4
SW3
HOME
BLK NC2
BLK/WHT NO3
RED

LINEAR MOTOR H
LINEAR MOTOR L
BLOWER MOTOR
BLOWER AC
DISK SPINDLE MOTOR
DISK SPINDLE AC

(DISK RELAY DR (SPINDLE MTR RELAY))
(SAFETY RELAY L (BLOWER MTR RELAY DR))
POWER AMP DR

ORN +15
BLU -15
RED +5
BLK GND
VIO +30 VAC
GRN AC LOW
YEL DC LOW

A1-D2
A1-B2
A1-A2
A4-E2
A4-E1
A4-F2
A4-F1

GRY/WHT
GRY/RED

JUMPER AC HI

D1

J1 1 2 3 4 5 6 7 8 9
J5 1 2 3
J4 3 1 2
J3 1 2 3 4 5 6 7 8 9
J2

TB4
RED 1
WHT 2
RED 3
4
5
6
GRN
C1 5 µf
BLK
WHT
GRY/GRN
3.
2.
R1 4
R1 ONLY CLOSES DURING START
D2
RED
BLU
YEL
MAIN
M1
START DISK SPINDLE MOTOR

BLU
GRN
ORN
BLK
M2
BLOWER MOTOR

LINE CORD AC INPUT
WHT
GRN
BLK
AC LOW 1
DC LOW 2
3
4
J6

POWER SUPPLY ASSY, H743

FOR 115V JUMPER 1&2 (RED), 3&4 (WHT)
FOR 230V JUMPER 2&3 (RED)

GROUND
BATTERY (+)
BLOWER AC
BLOWER MOTOR
DISK SPINDLE AC
BATTERY (-)
AC LOW
DISK SPINDLE MOTOR
LINEAR MOTOR H
DC LOW
BATTERY CHARGE

(SPINDLE MTR RELAY L, DISK RELAY DR)
(SAFETY RELAY L, BLOWER MTR RELAY DR)

P6
BLK BLK
RED RED
RED GRY/ORN
ORN GRY/WHT
RED GRY/YEL
BRN GRY/BLU
RED WHT/RED
VIO LINEAR MOTOR H +15
YEL -15
BLU
1 2 3 4 5 6 7 8 9 10 11 12 13 14 15

MOTOR RELAY BOARD 5409474

P7
ORN +15
BLU -15
GRY/ORN LINEAR MOTOR L
GRN GROUND
BLK POWER AMP DRIVE
GRY
1 2 3 4 5 6

POWER AMPLIFIER BOARD H604

REVISIONS	REV.	CHK	CHANGE NO.
	A		RKØ5-00032
	B		RKØ5-00034

D. JENSEN 2-23-73
D. JENSEN 3-6-73
D. JENSEN 4-3-73
D. JENSEN 4-5-73

DEC FORM NO DRD 102-B

FIRST USED ON OPTION/MODEL	QTY.	DESCRIPTION	PART NO.	ITEM NO.
RKØ5		PARTS LIST		

UNLESS OTHERWISE SPECIFIED DIMENSION IN INCHES. TOLERANCES
DECIMALS: .XXX = .005, .XX = .02, .X = .1
ANGLES: ±0° 30'
REMOVE BURRS AND BREAK SHARP CORNERS SURFACE QUALITY ✓
MATERIAL
FINISH

DRN. [illegible] DATE 9-24-71
CHK'D [illegible] DATE 12-8-71
ENG [illegible] DATE 3/30/72
PROJ. ENG [illegible] DATE 3/30/72
PROD [illegible] DATE 3/30/72
NEXT HIGHER ASSY. B-DD - RKØ5-Ø
SCALE NONE
SHEET OF

digital EQUIPMENT CORPORATION MAYNARD MASSACHUSETTS

TITLE CHASSIS WIRING RKØ5

SIZE D CODE BD NUMBER RKØ5 - Ø - 1 REV. B
DIST.

DIGITAL EQUIPMENT CORPORATION
MAYNARD, MASSACHUSETTS

ACCESSORY LIST

MADE BY	CHECKED	SECTION
DATE G. Schneider	DATE 8/17/72	
ENG DATE 8/17/72	PROD Alan Karlsberg DATE 8/17/72	ISSUED SECT.

LEGEND

D DOCUMENT
DN DOCUMENT CHANGE NOTICE
PA PAPER TAPE ASCII
PB PAPER TAPE BINARY
PM PAPER TAPE READ-IN-MODE

ITEM NO.	DWG NO. / PART NO.	DESCRIPTION	QUANTITY/VARIATION: All RK11's for all	All RK05's for all RK8E's
1	RK05-0	Customer Print Set (B-DD-RK05-0 Sheet one only)	1	1
~~2~~	~~DEC-RK05-1PB-1~~	~~ILLUSTRATED PARTS BREAK DOWN FOR RK05~~	~~1~~	~~1~~
3	DEC-00-RK05-DA	Maintenance Manual	1	1
4	BC 11A-6	Unibus Cable 6 feet	1	1
5	2200007	Head Cleaning Kit	1	1
6	3010350-00	Disk Cartridge 12 Sector	1	0
7	3010350-02	Disk Cartridge 16 Sector	0	1
8*	A-AD-7009276-0-0	Mounting Hardware KIT	1	1
9*	1209152-0-2 REF	Slide Chassis (Use set that was issued to Assy Line)	1	1
	NOTE: The following items are additionally required when unit is shipped in a rack.			
10	749691-1	Shipping Bracket (Left Hand)	1	1
11	749691-2	Shipping Bracket (Right Hand)	1	1
12**	3611382	Drive Identification Numbers	1	1
	*NOTE: If unit is shipped in a rack, Items 8 and 9 are mounted to the rack.			
	**NOTE: Attach the drive identification number set to the instruction sheet #DEC-16-(379)-1094-N573 using transparent adhesive tape. Insert sheet behind front cover of maintenance manual			

QUANTITY/VARIATION — KIT CHECK BY ____ DATE ____ — INSTALLATION CHECK BY ____ DATE ____

TITLE	ASSY. NO.	SIZE	CODE	NUMBER	REV.	ECO NO
DECpack Assembly	SHEET 1 OF 1	A	AL	RK05-0-17	E	RK05-00052
		DIST.				

digital EQUIPMENT CORPORATION
MAYNARD MASSACHUSETTS

DRAWING DIRECTORY

CUSTOMER PRINT SET INDEX

THIS IS PRINT SET

	SEQUENCE	SEQUENCE
DRAWING DIRECTORY	B-DD-H743-Ø	SHEET #1 ONLY
CIRCUIT SCHEMATIC	D-CS-H743-Ø-1	
±5V REGULATOR	E-IA-5409503-0-0	
CIRCUIT SCHEMATIC	D-CS-5409503-0-1	
±15V REGULATOR	E-IA-5409484-0-0	
CIRCUIT SCHEMATIC	D-CS-5409484-0-1	

MFG PRINTS

POWER SUPPLY	D-UA-H743-0-0
POWER SUPPLY (PL)	A-PL-H743-0-0
DRAWING DIRECTORY	B-DD-H743-Ø
PACKAGING INSTRUCTION	A-PI-3700130-0-0

UNIT VARIATIONS

VARIATION	TITLE	PRINT SET TYPE
H743-AA	POWER SUPPLY 115V	X
H743-AB	POWER SUPPLY 230V	X

REVISIONS		
DATE	CHG. NO.	REV
8/71	RK05-19	A
8/72	H743-1	B
2-73	H743-2	C
5-73	H743-3	D
11-73	H743-4	E
12-73	H743-5	F
2-74	H743-6	H
6-74	H743-7	J
3-75	H743-10	K

USED ON OPTION/MODEL: RKØ5

DRN. J. FLEMING	DATE 12/16/71	TITLE: POWER SUPPLY (H743)	
CHK'D.	DATE 4-7-72		
PROJ ENG.	DATE 4/26/72		
PROD.	DATE 4/19/72	SIZE B	CODE DD
FIELD SERV.	DATE	NUMBER H743-Ø	REV K
SHEET 1 OF 3		DIST 6	

DRB 106

DEC 16-(325)-1062-1-N871

This drawing and specifications, herein, are the property of Digital Equipment Corporation and shall not be reproduced or copied or used in whole or in part as the basis for the manufacture or sale of items without written permission. 1973

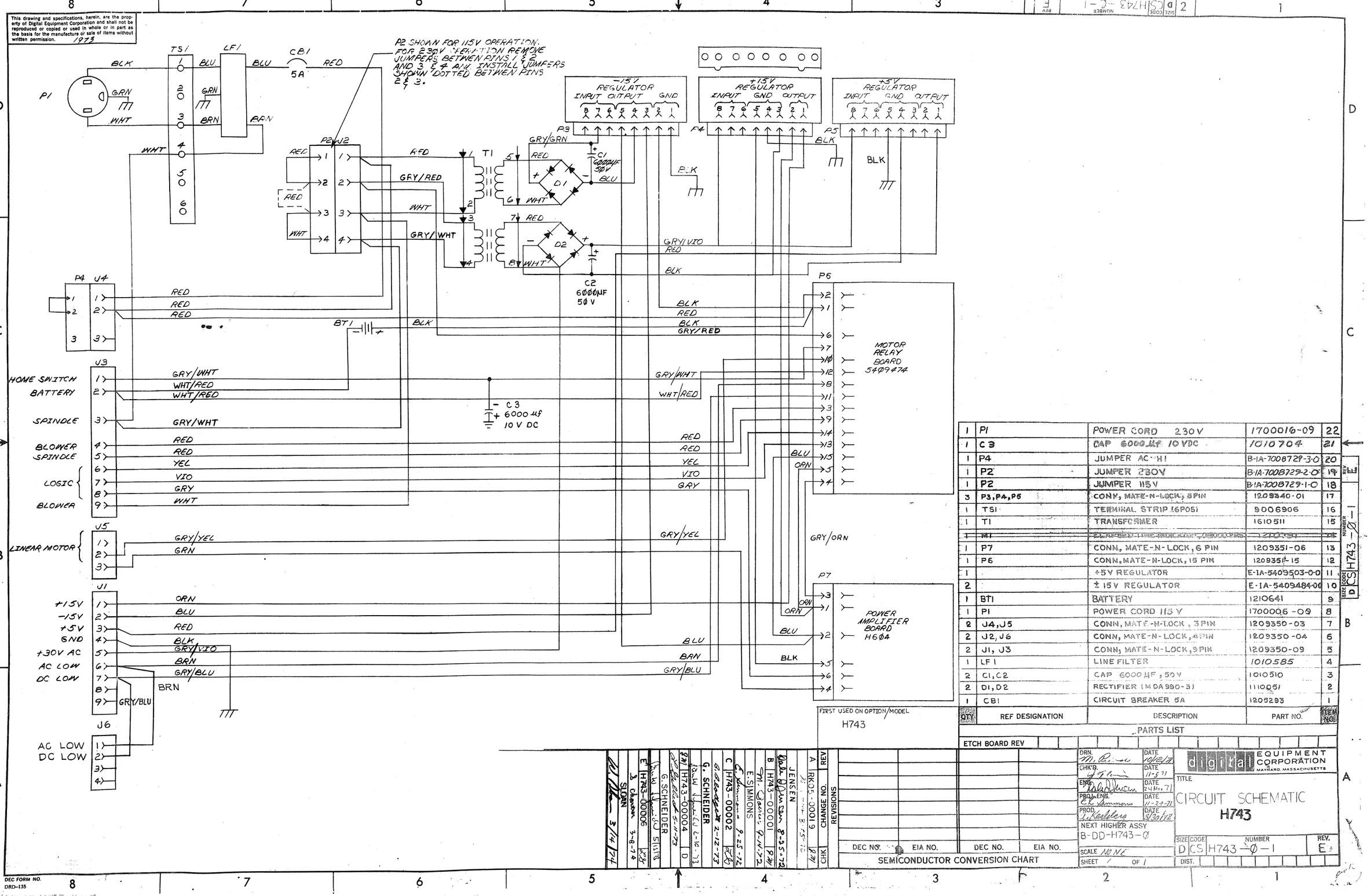

QTY	REF DESIGNATION	DESCRIPTION	PART NO.	ITEM NO.
1	P1	POWER CORD 230V	1700016-09	22
1	C3	CAP 6000 MF 10 VDC	1010704	21
1	P4	JUMPER AC "H1"	B-1A-7008729-3-0	20
1	P2	JUMPER 230V	B-1A-7008729-2-0	19
1	P2	JUMPER 115V	B-1A-7008729-1-0	18
3	P3,P4,P5	CONN, MATE-N-LOCK, 8 PIN	1209340-01	17
1	TS1	TERMINAL STRIP (6POS)	9006906	16
1	T1	TRANSFORMER	1610511	15
~~1~~	~~BT1~~	~~BATTERY, LONG DURATION, 6V 10 AH~~	~~1210781~~	~~14~~
1	P7	CONN, MATE-N-LOCK, 6 PIN	1209351-06	13
1	P6	CONN, MATE-N-LOCK, 15 PIN	1209351-15	12
1		+5V REGULATOR	E-1A-5409503-0-0	11
2		±15V REGULATOR	E-1A-5409484-00	10
1	BT1	BATTERY	1210641	9
1	P1	POWER CORD 115V	1700006-09	8
2	J4,J5	CONN, MATE-N-LOCK, 3 PIN	1209350-03	7
2	J2,J6	CONN, MATE-N-LOCK, 4 PIN	1209350-04	6
2	J1, J3	CONN, MATE-N-LOCK, 9 PIN	1209350-09	5
1	LF1	LINE FILTER	1010585	4
2	C1,C2	CAP 6000 MF, 50V	1010510	3
2	D1,D2	RECTIFIER (MDA980-3)	1110051	2
1	CB1	CIRCUIT BREAKER 5A	1205283	1

PARTS LIST

FIRST USED ON OPTION/MODEL
H743

ETCH BOARD REV

REV	CHANGE NO.	CHK	DATE	BY
A	RKO5-00019	JM	12-15-72	JENSEN
B	H743-00001	JM	8-25-72	M. SIMMONS
C	H743-00002	JM	2-12-73	G. SCHNEIDER
D	H743-00004	JM	5-11-73	G. SCHNEIDER
E	H743-00006	JM	3-8-74	J. SLOAN

SEMICONDUCTOR CONVERSION CHART

DEC NO.	EIA NO.	DEC NO.	EIA NO.

DRN. M. Rivera DATE 10/24/72
CHK'D. J. Sloan DATE 11-5-71
ENG. Ralph Deacon DATE 2-Nov-71
PROJ. ENG. E.K. Simmons DATE 11-29-71
PROD. J. Karlsberg DATE 9/30/72
NEXT HIGHER ASSY B-DD-H743-0
SCALE NONE
SHEET 1 OF 1

digital EQUIPMENT CORPORATION MAYNARD, MASSACHUSETTS

TITLE: CIRCUIT SCHEMATIC H743

SIZE D CODE CS NUMBER H743-0-1 REV. E
DIST.

DEC FORM NO. DRD-135

REV E | NUMBER CSH743-C-1 | SIZE D CODE | 2

This drawing and specifications, herein, are the property of Digital Equipment Corporation and shall not be reproduced or copied or used in whole or in part as the basis for the manufacture or sale of items without written permission.

WIRE TABLE

ITEM NO	DESIG ANG	FROM WIRE COLOR	FROM CONNECTION WITH	FROM SOLDER	TO CONNECTION	TO WITH	SOLDER
59	—	WHT	SPLIT LUG #2		Q5-E		SOLDER
59	—	GRY		#2	Q5-B		
59	—	VIO		#3	Q5-C		
59	—	BLU		#4	R21-2		
59	—	GRN		#9	TS-1		
59	—	YEL	SPLIT LUG #5		R21-T1		
59	—				D2-LUG		
59	—	RED	TS-2		R21-T2		
62	22	WHT/GRN	TS-1	SOLDER	D2		
59	—	BLK	L1	—	D2-LUG		
59	—	BLK	L1	—	TS-2		SOLDER
59	—	GRN					SOLDER
59	—	GRN	TS-1	SOLDER	D3 LUG		SOLDER
59	—	YEL	R21-T1	SOLDER	D3-K		SOLDER

EXTERNAL COMPONETS LIST

ITEM NO	DESIGNATION	POL	FROM	TO	POL
1	RES 10 OHM 5W		Q5-E	Q5-B	
1	CAP 1 uf 100V	+	Q5-E	TS-1	−

NOTES:

1. R15 IS USED FOR OUTPUT VOLTAGE ADJUSTMENT.
   R7 IS USED FOR OUTPUT CURRENT ADJUSTMENT.
2. * INDICATES JUMPERS TO BE INSTALLED.

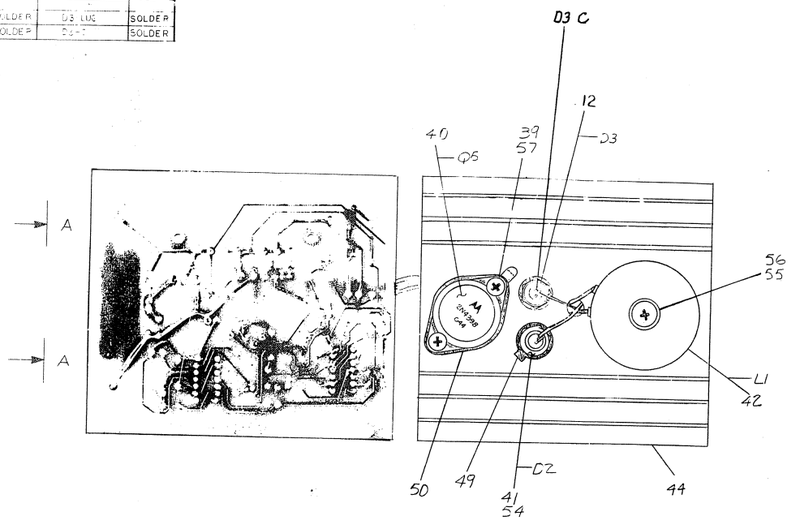

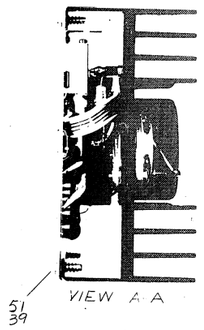

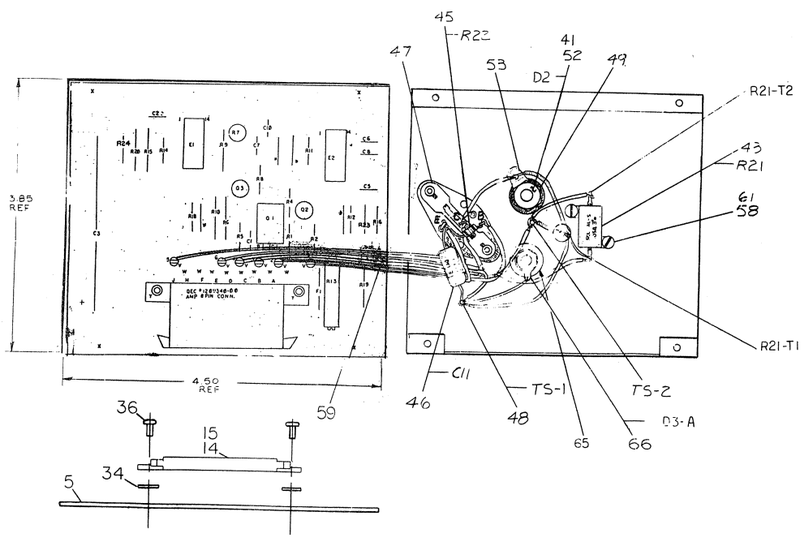

QTY	REF DESIGNATION	DESCRIPTION	PART NO	ITEM NO
1		SOLDER LUG	9006764	66
1		1.4 FLAT WASHER	9006674	65
1	C3	CAP 330UF 10V	1009808	64
A/R		WIRE 22 AWG TRACER WHT/GRN	9107400-95	63
2		WASHER INT TOOTH LOCK #2	9006831	62
A/R		BUS WIRE 22 AWG	9107560-01	61
A/R		20 CONNECTOR CABLE	9107575	60
2		SCR BINDING HD 2-56X3/16 SS	9006000-4	59
2		SCR PHIL PAN HD 6-32X1/2 SST	9006024-1	57
1		SCR PHIL TRUSS HD 10-32X1 SST	9006077-3	56
1		WASHER INT TOOTH LOCK #10	9006635	55
1		BUSHING	9009441	54
1		SOLDER LUG	9008150	53
1		NUT HEX#10-32	9008564	52
4		SCR PHIL PAN HD#6-32X3/8 S T	9008407	51
1		THERMAL INSULATOR	9008419	50
2		THERMAL INSULATOR	9008424	49
2	TS1 TS2	INSULATED TERM STANDOFF	9009060	48
1		TRANSISTOR SOCKET	1210130	47
1	C11	CAP 1 UF 100-10	1005507	46
2	R22, R23	RES 100 5 1/4 W	1300229	45
1		HEAT SINK	D-IA-5309543-0-0	44
1	R21	RES 0 05 5W 3	1310507	43
1	L1	120 UH CHOKE	1810573	42
1	D2	IN 3889 DIODE	1110491	41
1	Q5	2N 4398 TRANSISTOR	1505870	40
6		WASHER INT TOOTH #6	9006633	39
1	R11	RES 27 1/4W 5	1301522	38
1	R16	RES 1 5K 1/4W 5	1300301	37
2		EYELETS WA 1733 STIMPSON	9006745	36
6		SPLIT LUGS	9006735	35
2		WASHER NYLON	9006707	34
1	E1 E2	IC 723C D I P REGULATOR	1910415	33
1	Q1	TRANSISTOR D45C6 G E	1510414	32
				31
2	Q2 Q3	TRANSISTOR DEC 6534D	1503409-00	30
1	R8	RES 2 7W 1/4W 5	1309880	29
2	R9 R15	RES 3 83K 1/8W 1	1309413	28
1	R7	RES 1K 1/2W 20	1309150-3	27
1	R13	RES 1K 10 76PR	1309143-07	26
1	R20	RES 2 74K 1/8W 1 MF	1304868	25
1	R6	RES 2 61K 1/8W 1 MF	1303303	24
1	R19	RES 1K 1/8W 1 MF	1303114	23
1	R14	RES 56 1/4W 5	1302802	22
1	R10	RES 4 7K 1/2W 5	1300445	21
1	R5	RES 270 1/4W 5	1301922	20
1	R4	RES 4 7K 1/4W 5	1300447	19
3	R1 R2 R12	RES 1K 1/4W 5	1300365	18
1	R18	RES 330 1/4W 5	1300295	17
1	R24	RES 82 1 1/4W 10%	1303187	16
8		CONNECTOR PIN	1209456	15
1	J1	CONN 8 PIN AMP	1209340-01	14
1	F1	FUSE 5 AMPS	1209010	13
1	D3	DIODE IN4553B 5.6V	1111241	12
1	C8	CAP 02 UF 100V-0+20% DISC	1000004	11
1	C3	CAP 930 UF 30V-10+75% ELEC	1010509	10
3	C1 C5 C10	CAP 01 UF 100V 20% DISC	1001610	9
1	C7	CAP 1000 PF 100V 5% MICA	1000042	8
1	C2	CAP 100 PF 100V 5% DM	1009016	7
1	C6	CAP 68 PF 100V 5% DM	1000014	6
1		ETCH CIRCUIT BOARD	5009502	5
1		MODULE ECO HISTORY	D-MH-5409503-0-A	4
1		ASSY/DRILLING HOLE LAYOUT	D-MH-5409503-0-S	3
1		X-Y COORDINATE HOLE LOCATION	A-CD-5409503-0-A	2
1		CIRCUIT SCHEMATIC	D-CS-5409503-0-1	1

PARTS LIST

ETCH BOARD REV F

FIRST USED ON OPTION MODEL

REV	DESCRIPTION	CHK	CHANGE NO
A	ECO 1020		

DEC NO	EIA NO
2N3889	SAME
2N4398	"
D45C6	"
2N4441	"
DEC 6534D	MPS 6534
1N752A	SAME

SEMICONDUCTOR CONVERSION CHART

REV	DESCRIPTION	ORIGINATED	CHK	CHANGE NO
A	ECO 1020	2-13-75		
B	ECO 1037	4-1-75		
C	ECO 1503	6-18-75		
D	ECO 1503	6-18-75		
E	ECO 1503	6-18-75		
F	ECO 1503	6-18-75		
G	ECO 1503	6-18-75		
H	ECO 1503	6-18-75		
J	ECO 1503	6-18-75		
K	ECO 1503	6-18-75		
L	ECO 1503	6-18-75		
M	ECO 1503	6-18-75		

REVISIONS

UNLESS OTHERWISE SPECIFIED
DIMENSION IN INCHES
TOLERANCES
DECIMALS ± .005 FRACTIONS ± 1/64 ANGLES ± 0°30'
FINAL SURFACE QUALITY √
REMOVE BURRS AND BREAK SHARP CORNERS

MATERIAL

FINISH

DRN [illegible] DATE 12/6/72
CHK D DATE 12/6/72
ENG [illegible] DATE 1-7-77
PROJ ENG [illegible] DATE 1-7-77
PROD [illegible] DATE 1-7-77
QA [illegible] DATE 1-7-77

DIGITAL EQUIPMENT CORPORATION
MAYNARD, MASSACHUSETTS

TITLE
+5 VOLT
POWER REGULATOR

SIZE E | CODE | NUMBER 54095O3-0-0 | REV M

SCALE NONE
SHEET 1 OF 1
DIST.

E 54095O3-0-0 M

THIS SCHEMATIC IS FURNISHED ONLY FOR TEST AND MAINTENANCE PURPOSES. THE CIRCUITS ARE PROPRIETARY IN NATURE AND SHOULD BE TREATED ACCORDINGLY
COPYRIGHT 1971 BY DIGITAL EQUIPMENT CORPORATION

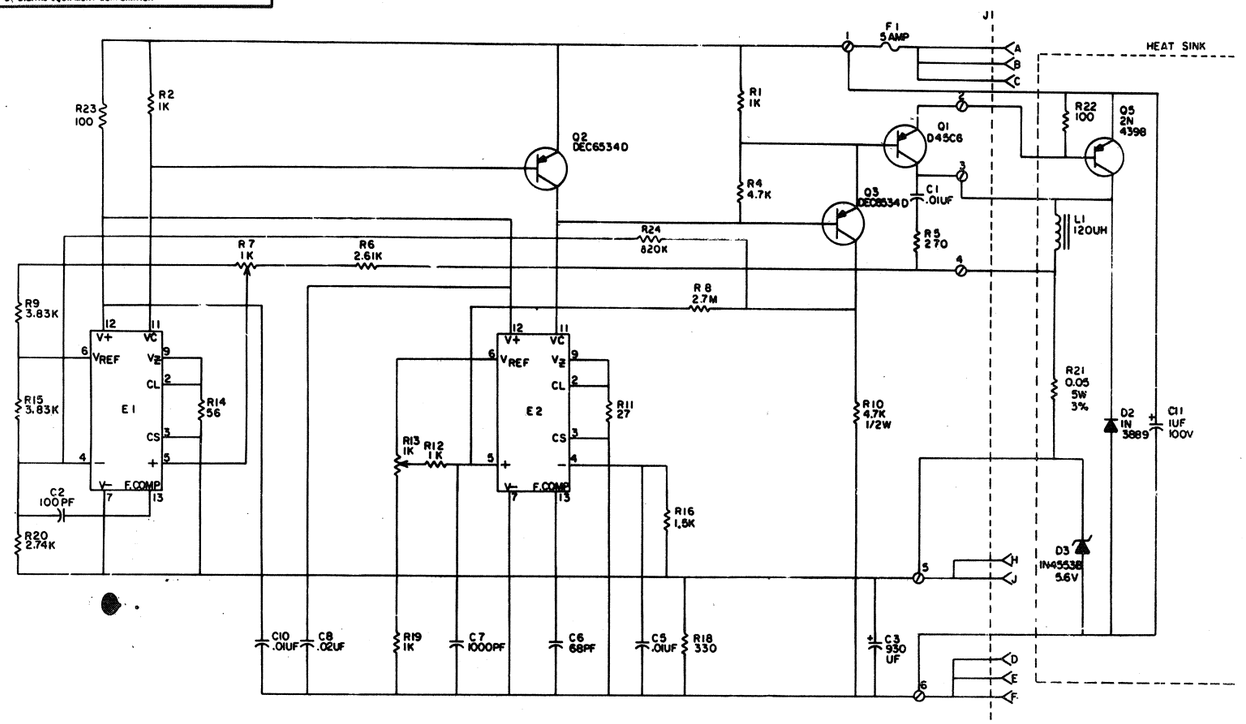

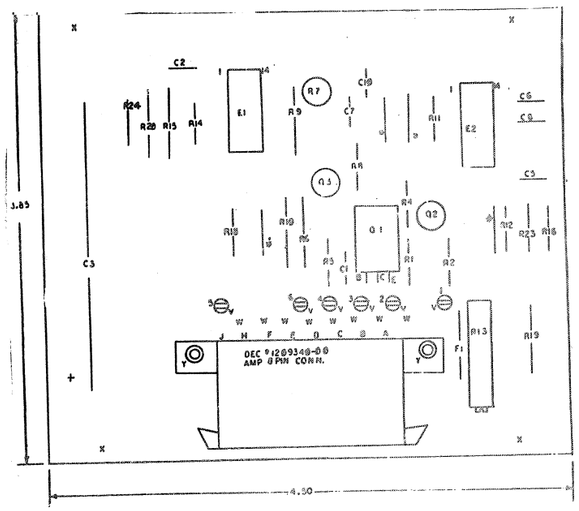

REVISIONS	CHK	CHG NO	REV
		00001	D
		00002	E
		00003	F
		00004	G
		00005	H
		00006	J
		00007	K
		00008	L
		00009	M

DRN S. Cooper DATE 6-2-71
CHKD Nancy Moore DATE 6-7-71
ENG DATE 7/6/71
PROD DATE

TRANSISTOR & DIODE CONVERSION CHART

DEC	EIA	DEC	EIA
DEC6534C	MPS6532	IN752A	SAME
D45C6		IN3889	SAME
2N4441			
2N4398			

digital EQUIPMENT CORPORATION MAYNARD, MASSACHUSETTS

TITLE 15 VOLT REGULATOR

SIZE	CODE	NUMBER	REV
D	CS	5409503-0-1	M

PRINTED CIRCUIT REV. F

DEC FORM NO. DRD 116

PINKY.

This drawing and specifications, herein, are the property of Digital Equipment Corporation and shall not be reproduced or copied or used in whole or in part as the basis for the manufacture or sale of items without written permission.

WIRE TABLE

ITEM NO.	DESCRIPTION AWG	COLOR	LENGTH INCHES ~1/8	STRIP LENGTH X	STRIP LENGTH Y	CONNECTIONS FROM	TO
43	—	BLK	2 7/8	—	1/2	L1	D3-CATHODE D3-LUG
43	—	BLK	2 7/8	—	1/2	L1	TS-2
65	18	BLU	2 7/8	1/2	1/2	Q4-C	D3-LUG
67	18	GRY	3 7/8	1/2	1/2	Q4-E	R24-T2
64	18	GRN	4 1/2	1/2	1/2	D3-ANODE	TS-1
68	18	WHT	5 7/8	1/2	1/2	SPLIT LUG #1	R24-T1
67	18	GRY	4 7/8	1/2	1/2	" " 2	Q4-E
66	18	VIO	5 7/8	1/2	1/2	" " 3	Q4-B
65	18	BLU	5 7/8	1/2	1/2	" " 4	Q4-C
64	18	GRN	5 1/2	1/2	1/2	" " 6	TS-1
63	18	YEL	6 7/8	1/2	1/2	" " 5	TS-2

EXTERNAL COMPONENTS

ITEM NO	LENGTH	DESCRIPTION	POL	CONNECTIONS FROM	TO	POL
45	SEE NOTE 2	RES 100 · 1/4W 5%		Q4-E	Q4-B	
47	SEE NOTE 3	CAPTO OF 50 · 10%	+	Q4-E	TS-1	—

NOTES

1. R17 IS USED FOR OUTPUT VOLTAGE ADJUSTMENT. R2 IS USED FOR OUTPUT POWER ADJUSTMENT.
2. CUT LEADS OF RES. (R25) SO THERE IS 3/8 OF A LEAD LEFT AT BOTH ENDS. (R25 3/8)
3. CUT LEADS OF CAP. (C9) SO THERE IS 1/2" OF A LEAD LEFT AT BOTH ENDS. (C9 1/2)
4. THERMAL COMPOUND (ITEM #39) IS TO BE APPLIED TO BOTH SIDES OF ALL THERMAL INSULATORS (ITEM #50 + 51) BOTH SIDES OF EACH INSULATOR SHOULD BE COMPLETELY COVERED, LEAVING NO VOIDS WHEN INSTALLED. CARE MUST BE EXERCISED SO THAT NO EXTRA COMPOUND INTERFERES WITH ANY ELECTRICAL CONNECTION MADE TO ANY DEVICE.

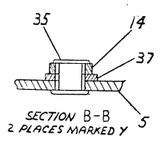

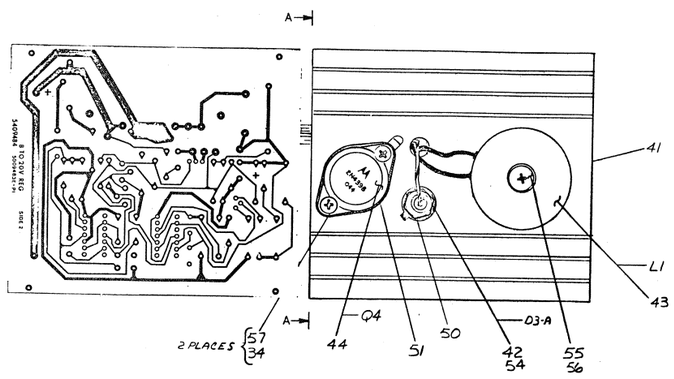

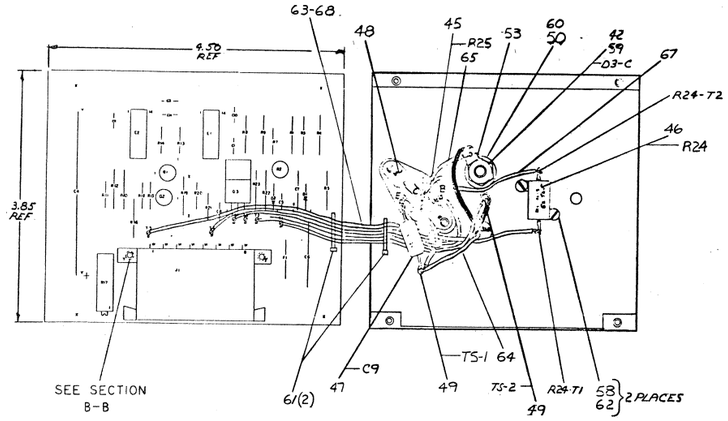

QTY.	DESCRIPTION	PART NO.	ITEM NO.
	PARTS LIST		

UNLESS OTHERWISE SPECIFIED
DIMENSION IN INCHES
TOLERANCES
DECIMALS ± .005 FRACTIONS ± 1/64 ANGLES ± 0°30'
FINAL SURFACE QUALITY ✓
REMOVE BURRS AND BREAK SHARP CORNERS

MATERIAL —//—
FINISH —//—

DRN. DATE
CHK'D DATE
ENG. DATE
PROJ. ENG. DATE
PROD. DATE

D-UA-4737-0-0
SCALE NONE
SHEET 1 OF 1

DIGITAL EQUIPMENT CORPORATION
MAYNARD, MASSACHUSETTS

TITLE
8 TO 20V REGULATOR

SIZE E | CODE | NUMBER 5409484-0-0 | REV. F
DIST.

5409484-0-0

THIS SCHEMATIC IS FURNISHED ONLY FOR TEST AND MAINTENANCE PURPOSES. THE CIRCUITS ARE PROPRIETARY IN NATURE AND SHOULD BE TREATED ACCORDINGLY
COPYRIGHT 1971 BY DIGITAL EQUIPMENT CORPORATION

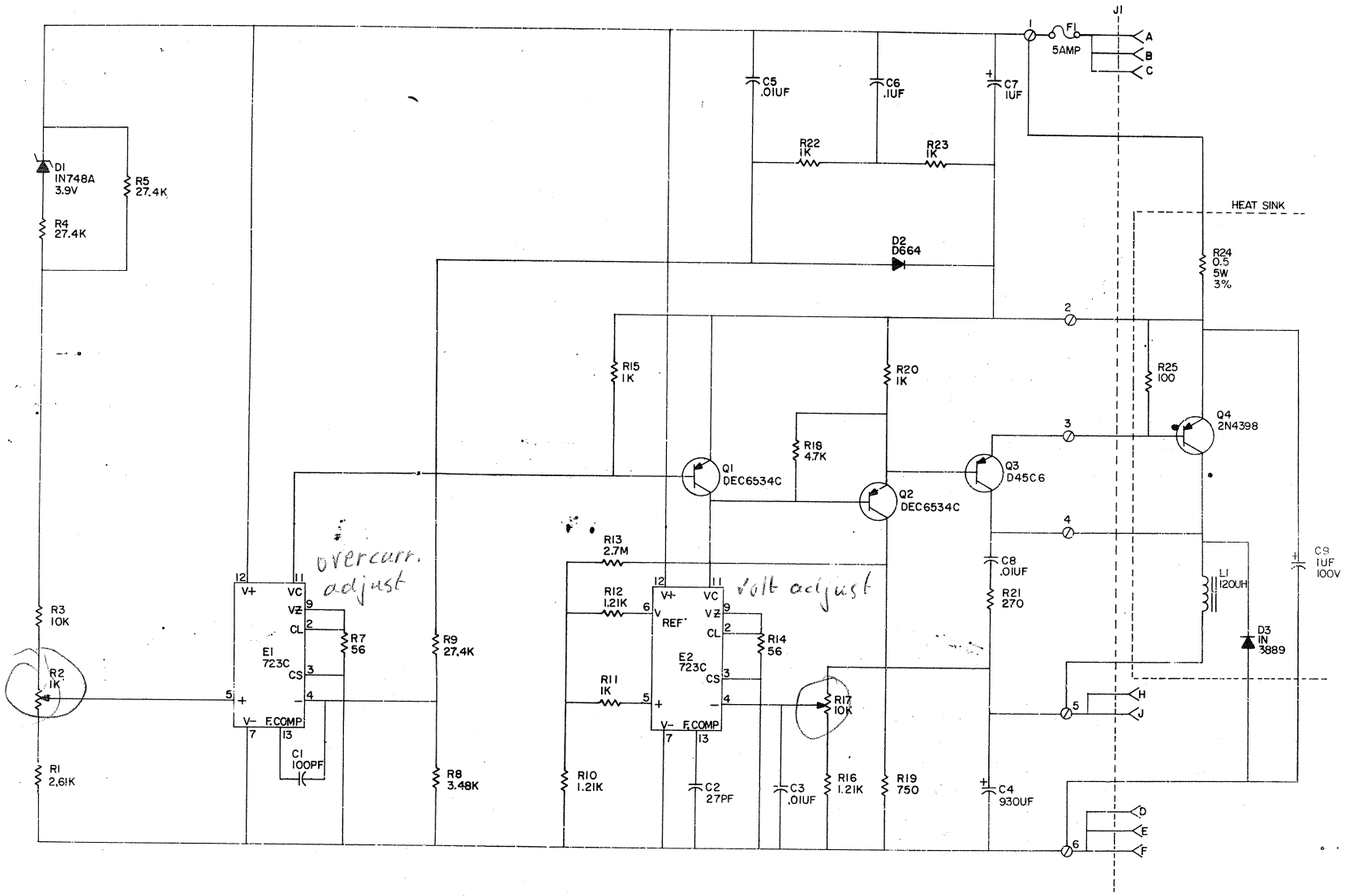

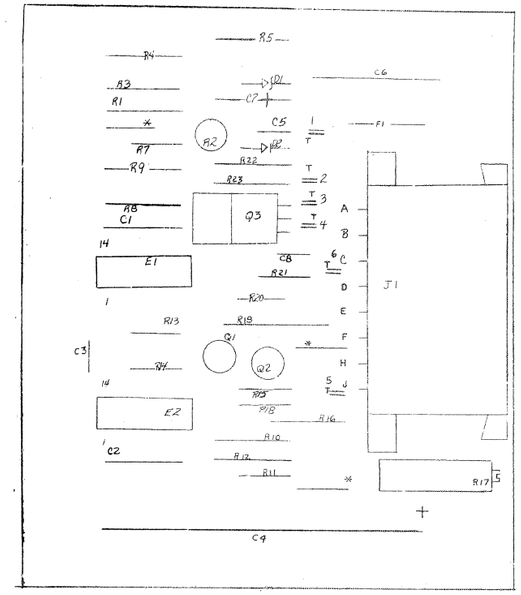

1	R6	FOR FUTURE USE		27
8		CONNECTOR PINS	1209456	37
1	J1	AMP 8 PIN CONNECTOR (MATE & LOCK)	1209340-09	36
1	F1	FUSE, 5 AMP 3	1209070	35
2		EYELET	9006745	34
6		SPLIT LUGS	9006735	33
2		WASHER, NYLON	9006707	32
2	E1, 2	DIP REGULATOR 723C	1910615	31
1	Q3	TRANSISTOR D45C6	1510414	30
1	Q1, 2	TRANSISTOR DEC 6534C	1503409-02	29
1	R13	RES. 2.7M ¼W 5%	1309680	28
1	R6	RES. 2K ¼W 5%	1309595	27
3	R4, 9, 5	RES. 27.4K 1/8W 1% MF	1309413	26
1	R2	RES. VARIABLE 1K ¼W	1309150-03	25
1	R17	RES. VARIABLE 10K 3/4W 12%	1309142-10	24
1	R5	RES. 22.6K 1/8W 1% MF	1309412	23
1	R8	RES. 3.48K 1/8W 1% MF	1305113	22
1	R3	RES. 10K 1/8W 1% MF	1303312	21
2	R22, 23	RES. 1K 1/8W 1% MF	1303113	20
1	R1	RES. 2.61K 1/8W 1% MF	1303303	19
3	R10, 12, 16	RES. 1.21K 1/8W 1% MF	1302871	18
2	R7, 14	RES. 56 ¼W 5%	1302602	17
1	R19	RES. 750 1W 5%	1302385	16
1	R21	RES. 270 ¼W 5%	1301972	15
1	R18	RES. 4.7K ¼W 5%	1300647	14
3	R11, 15, 20	RES. 1K ¼W 5%	1300365	13
1	D1	DIODE ZENER 1N748A 3.9V	1100122	12
1	D2	DIODE D664	1100114	11
1	C4	CAP. 930UF 30V -10+75%	1010509	10
1	C6	CAP. .1UF 100V 10% MYLAR	1003242	9
1	C7	CAP. 1UF 35V 10% S. TANT	1001776	8
1	C2	CAP. 27PF 100V 5% MICA	1001739	7
3	C3, 5, 9	CAP. .01UF 100V 20% DISC	1001610	6
1	C1	CAP. 100PF 100V 5% MICA	1000016	5
0		ETCHED CIRCUIT BOARD	5009483	4
		MODULE ECO HISTORY	B-MH-5409484-0-6	3
		ASSY/DRILLING HOLE LAYOUT	D-AD-5409484-0-5	2
		X-Y COORDINATE HOLE LOCATION	K-CO-5409484-0-1	1
QTY	REF. DESIGNATION	DESCRIPTION	DEC PART NO.	FIND NO.

PARTS LIST

2		THERMAL INSULATOR	9008426	47
1		STAND OFF (STUD TYPE)	9009060	46
1		TRANSISTOR SOCKET	1210130	45
1	C9	CAP. 1UF 100V	1005567	44
1	R24	RES. 0.5 3% 5W	1310508	43
1	R25	RES. 100 5% ¼W	1306329	42
1	Q4	TRANSISTOR 2N4398	1505870	41
1	L1	120UH CHOKE	1616573	40
1	D3	DIODE 1N3889	1100491	39
1		HEAT SINK	5305943	38

AR		8 TO 20V REGULATOR	E-IA-5409484-0-0	58
AR		20 CONDUCTOR CABLE	93-07575	57
1		#10/32 HEX NUT	9006584	56
2		2/56 X 3/16'' SCREW	9006000-4	55
2		6/32 X ¼'' PAN HD SCREW	9006034-3	54
1		10/32 X 1'' TRUSS HD SCREW	9006077-3	53
1		#10 INTERNAL LOCK WASHER	9006635	52
1		BUSHING (DIODE)	9006841	51
1		SOLDER LUG	9008150	50
4		#6 SELF TAPING SCREW	9008701	49
1		THERMAL INSULATOR	9008419	48

REVISIONS	CHK	CHG NO	REV
ADDED R6		10001	D
CHANGED R2 TO 1K		10002	E

		DATE
DWN	B D Hale	6/2/71
CHK'D	Nancy Moore	6/7/71
ENG	[illegible]	6/7/71
PROD		DATE

TRANSISTOR & DIODE CONVERSION CHART			
DEC	EIA	DEC	EIA
DEC6534C	MPS6534	DEC664	IN3606
D45C6		IN748A	SAME
2N4398			
IN3889	SAME		

DIGITAL EQUIPMENT CORPORATION
MAYNARD, MASSACHUSETTS

TITLE			
8 TO 20 V REGULATOR			
SIZE	CODE	NUMBER	REV
D	CS	5409484-0-1	E
PRINTED CIRCUIT REV	D		

DEC FORM NO. DRD 1-8

DRWG NO	REVLTR
K-WL-RKØ5-Ø-3	B

REVISIONS				
REV LTR	ECO NO	DATE	ENG	
B	RK05-00031	2/73	[illegible]	
A	RK05-00014	7/72	[illegible]	

DRAWN RE Hellen	DATE 11/8/71	digital EQUIPMENT CORPORATION MAYNARD, MASSACHUSETTS
CHECKED [illegible]	DATE 11-9-71	
ENG [illegible]	DATE 24 Nov 71	
PROJ ENG EC Simmons	DATE 11-24-71	
PROD [illegible]	DATE 11/29/71	

TITLE: WIRE LIST (RKØ5)

FOR TAPE* FILE*

ASSY NO	SIZE	CODE	DWG. NO.	REV LTR
D-AD-7008696-0-0	K	WL	RKØ5-Ø-3	B

SCALE NONE | SHEET 1 OF 1 | DIST.

RK05LB.B WRP288.V22(22) 11/06/73 11-FEB-74 23:14 PAGE 1

RUN NAME	A/P	PIN NAME	ORDER PIN	BAY - ORDER	Q	DRAW RV PG Y	X	Z	REMARKS	LENGTH	EXCEPTIONS	RUN NUMBER
+15VDC	H	A05D2		1-01		D05-9		1				1
+15VDC	H	A06D1		1-02		D05-9						1
+15VDC				1						2-6/8		1
+5VDC BULB	H	B06A1		1-01		D05-9		1				2
+5VDC BULB	H	B06A2		1-02		D05-9						2
+5VDC BULB				1						2-6/8		2
128	H	A01M2		1-01		D05-1		1				3
128	H	B03A1		1-02		D05-1						3
128				1						5-2/8		3
AC LOW	H	A04R2		1-01		D05-8		1				4
AC LOW	H	B08F1		1-02		D05-8		2				4
AC LOW	H	B07F1		1-03		D05-8						4
AC LOW				1						9-0/8		4
ADDR ACCEPTED	L	A02S1		1-01		D05-5		1				5
ADDR ACCEPTED	L	A03N1		1-02		D05-5						5
ADDR ACCEPTED				1						3-6/8		5
ADDRESS INVALID	L	B02F1		1-01		D05-2		1				6
ADDRESS INVALID	L	B03E1		1-02		D05-2						6
ADDRESS INVALID				1						2-7/8		6
BLOWER MTR RELAY DR	H	A04A1		1-01		D05-9		1				7
BLOWER MTR RELAY DR	H	B06N1		1-02		D05-9						7
BLOWER MTR RELAY DR				1						8-2/8		7
BUS ADDR ACCEPTED	L	A02R1		1-01		D05-4		1				8
BUS ADDR ACCEPTED	L	A07R2		1-02		D05-4		2				8
BUS ADDR ACCEPTED	L	A08R2		1-03		D05-4						8
BUS ADDR ACCEPTED				1						9-2/8		8
BUS ADDR INVALID	L	A08T2		1-01		D05-4		2				9
BUS ADDR INVALID	L	A07T2		1-02		D05-4		1				9
BUS ADDR INVALID	L	B02A1		1-03		D05-4						9
BUS ADDR INVALID				1						10-2/8		9
BUS FILE READY	L	A04M1		1-01		D05-7		1				10
BUS FILE READY	L	B08N1		1-02		D05-7		2				10
BUS FILE READY	L	B07N1		1-03		D05-7						10
BUS FILE READY				1						10-7/8		10

	A/P	PIN NAME	ORDER PIN	BAY - ORDER	Q	DRAW	RV	PG	Y	X	Z	REMARKS	LENGTH	EXCEPTIONS	RUN NUMBER
BUS WRITE CK	H	R04P1		1-01		D05=9					1				20
BUS WRITE CK	H	R07K1		1-02		D05=8					2				20
BUS WRITE CK	M	R08K1		1-03		D05=8									20
BUS WRITE CK				1									8=4/8		20
COS POSITION	H	A05U1		1-01		D05=9					1				21
COS POSITION	M	R06B1		1-02		D05=9									21
COS POSITION				1									4-1/8		21
COUNT PULSE FWD	H	A05A1		1-01		D05=5					1				22
COUNT PULSE FWD	H	R03K1		1-02		D05=5									22
COUNT PULSE FWD				1									7=6/8		22
COUNT PULSE REV	H	A05C1		1-01		D05=5					1				23
COUNT PULSE REV	H	R03F1		1-02		D05=5									23
COUNT PULSE REV				1									7=0/8		23
CYC ADDR 0	L	A07K1		1-01		D05=5					2				24
CYC ADDR 0	L	A08K1		1-02		D05=5					1				24
CYC ADDR 0	L	R03L1		1-03		D05=5									24
CYC ADDR 0				1									10=5/8		24
CYC ADDR 1	L	A07D1		1-01		D05=6					2				25
CYC ADDR 1	L	A08D1		1-02		D05=6					1				25
CYC ADDR 1	L	R03N1		1-03		D05=6									25
CYC ADDR 1				1									11=3/8		25
CYC ADDR 2	L	A08L1		1-01		D05=6					2				26
CYC ADDR 2	L	A07L1		1-02		D05=6					1				26
CYC ADDR 2	L	R03P1		1-03		D05=6									26
CYC ADDR 2				1									10=5/8		26
CYC ADDR 3	L	A07C1		1-01		D05=6					2				27
CYC ADDR 3	L	A08C1		1-02		D05=6					1				27
CYC ADDR 3	L	B03M1		1-03		D05=6									27
CYC ADDR 3				1									11-3/8		27
CYC ADDR 4	L	A07F1		1-01		D05=6					2				28
CYC ADDR 4	L	A08F1		1-02		D05=6					1				28
CYC ADDR 4	L	B03K1		1-03		D05=6									28
CYC ADDR 4				1									11-3/8		28
CYC ADDR 5	L	A07J1		1-01		D05=6					2				29
CYC ADDR 5	L	A08J1		1-02		D05=6					1				29
CYC ADDR 5	L	B03U1		1-03		D05=6									29
CYC ADDR 5				1									11-4/8		29

	A/P	PIN NAME	ORDER PIN	BAY - ORDER	Q	DRAW	RV	PG	Y	X	Z	REMARKS	LENGTH	EXCEPTIONS	RUN NUMBER
BUS INDEX PUL	L	A02K1		1-01		D05=3					1				11
BUS INDEX PUL	L	B08M1		1-02		D05=3					2				11
BUS INDEX PUL	L	B07M1		1-03		D05=3									11
BUS INDEX PUL				1									10=7/8		11
BUS R/W/S READY	L	A02M1		1-01		D05=4					1				12
BUS R/W/S READY	L	A07H2		1-02		D05=4					2				12
BUS R/W/S READY	L	A08H2		1-03		D05=4									12
BUS R/W/S READY				1									9=6/8		12
BUS SECTOR ADDR	L	A02H1		1-01		D05=3					1				13
BUS SECTOR ADDR	L	R08L1		1-02		D05=3					2				13
BUS SECTOR ADDR	L	B07L1		1-03		D05=3									13
BUS SECTOR ADDR				1									11=0/8		13
BUS SECTOR ADDR 1	L	A02J1		1-01		D05=4					1				14
BUS SECTOR ADDR 1	L	A07P2		1-02		D05=4					2				14
BUS SECTOR ADDR 1	L	A08P2		1-03		D05=4									14
BUS SECTOR ADDR 1				1									9=6/8		14
BUS SECTOR ADDR 2	L	A02L1		1-01		D05=4					1				15
BUS SECTOR ADDR 2	L	R07K2		1-02							2				15
BUS SECTOR ADDR 2	L	R08K2		1-03		D05=4									15
BUS SECTOR ADDR 2				1									10=2/8		15
BUS SECTOR ADDR 3	L	A02P1		1-01		D05=4					1				16
BUS SECTOR ADDR 3	L	B07J1		1-02		D05=4					2				16
BUS SECTOR ADDR 3	L	B08J1		1-03		D05=4									16
BUS SECTOR ADDR 3				1									10=2/8		16
BUS SECTOR PULSE	L	A02F1		1-01		D05=3					1				17
BUS SECTOR PULSE	L	B08N2		1-02		D05=3					2				17
BUS SECTOR PULSE	L	B07N2		1-03		D05=3									17
BUS SECTOR PULSE				1									11=2/8		17
BUS SFEX INCOMPLETE	L	A02N1		1-01		D05=4					1				18
BUS SFEX INCOMPLETE	L	A07S2		1-02		D05=4					2				18
BUS SFEX INCOMPLETE	L	A08S2		1-03		D05=4									18
BUS SFEX INCOMPLETE				1									9=4/8		18
BUS WR PROTECT STATUS	H	R04U1		1-01		D05=8					1				19
BUS WR PROTECT STATUS	H	R07P1		1-02		D05=8					2				19
BUS WR PROTECT STATUS	H	B08P1		1-03		D05=8									19
BUS WR PROTECT STATUS				1									8=4/8		19

A/P	PIN NAME	ORDER PIN	BAY - ORDER	Q	DRAW	RV	PG	Y	X	Z	REMARKS	LENGTH	EXCEPTIONS	RUN NUMBER
	CYC ADDR 0	L A08E1	1-01				D05=6			2				30
	CYC ADDR 0	L A07E1	1-02				D05=6			1				30
	CYC ADDR 0	L B03V1	1-03				D05=6							30
			1									12=6/8		
	CYC ADDR 7	L A07H1	1-01				D05=6			2				31
	CYC ADDR 7	L A08H1	1-02				D05=6			1				31
	CYC ADDR 7	L B03S1	1-03				D05=6							31
			1									11=3/8		
	DC LOW	H A04D1	1-01				D05=8			1				32
	DC LOW	H B08F2	1-02				D05=8			2				32
	DC LOW	H B07F2	1-03				D05=8							32
			1									11-1/8		
	DIFF 1	L A03A1	1-01				D05=7			1				33
	DIFF 1	L B05N2	1-02				D05=7							33
			1									8=4/8		
	DIFF 16	L A03E1	1-01				D05=7			1				34
	DIFF 16	L B05T2	1-02				D05=7							34
			1									8=4/8		
	DIFF 2	L A03B1	1-01				D05=7			1				35
	DIFF 2	L B05P2	1-02				D05=7							35
			1									8=2/8		
	DIFF 4	L A03D1	1-01				D05=7			1				36
	DIFF 4	L B05R2	1-02				D05=7							36
			1									8=2/8		
	DIFF 8	L A03C1	1-01				D05=7			1				37
	DIFF 8	L B05S2	1-02				D05=7							37
			1									8=4/8		
	DISK RELAY DR	H A04N1	1-01				D05=8			1				38
	DISK RELAY DR	H B06P1	1-02				D05=8							38
			1									6=6/8		
	DR UNLOCKING SOLENOID	L A06P1	1-01				D05=8			1				39
	DR UNLOCKING SOLENOID	L B04V1	1-02				D05=8							39
	DR UNLOCKING SOLENOID		1									7=2/8		
	FAULT IND	H A04N2	1-01				D05=8			1				40
	FAULT IND	H A06H1	1-02				D05=8							40
	FAULT IND		1									4=0/8		40
	GND 06	A06C2	1-01							1				47
	GND 06	A06T1	1-02							2				47
	GND 06	R06C2	1-03				D05=9			1				47
	GND 06	R06C1	1-04				D05=9			2				47
	GND 06	R06E1	1-05				D05=9			1				47
	GND 06	R06J1	1-06				D05=9			2				47
	GND 06	R06T1	1-07				D05=9			1				47
	GND 06	R06S1	1-08				D05=9							47
	GND 06		1									23=6/8		47
	GND 05	A05C2	1-01							1				46
	GND 05	A05T1	1-02							2				46
	GND 05	R05C2	1-03							1				46
	GND 05	R05T1	1-04											46
	GND 05		1									13=6/8		46
	GND 04	A04C2	1-01							1				45
	GND 04	A04T1	1-02							2				45
	GND 04	B04C2	1-03							1				45
	GND 04	R04T1	1-04											45
	GND 04		1									13=6/8		45
	GND 03	A03C2	1-01							1				44
	GND 03	A03T1	1-02							2				44
	GND 03	R03C2	1-03							1				44
	GND 03	R03T1	1-04											44
	GND 03		1									13=6/8		44
	GND 02	A02C2	1-01							1				43
	GND 02	A02T1	1-02							2				43
	GND 02	R02C2	1-03							1				43
	GND 02	R02T1	1-04											43
	GND 02		1									13=6/8		43
	GND 01	A01C2	1-01							1				42
	GND 01	A01T1	1-02							2				42
	GND 01	B01C2	1-03							1				42
	GND 01	R01T1	1-04											42
	GND 01		1									13=6/8		42
	FWD		1									4=2/8		41
	FWD	H B05J2	1-02				D05=5							41
	FWD	H B03J1	1-01				D05=5			1				41

	A/P	PIN NAME	ORDER PIN	BAY - ORDER	Q	DRAW RV PG Y	X	Z	REMARKS	LENGTH	EXCEPTIONS	RUN NUMBER
GND 07		A07B2		1-01								
GND 07		A07C2		1-02				1				48
GND 07		A07N1		1-03				2				48
GND 07		A07P1		1-04				1				48
GND 07		A07R1		1-05				2				48
GND 07		A07S1		1-06				1				48
GND 07		A07T1		1-07				2				48
GND 07		A07V1		1-08				1				48
GND 07		B07B2		1-09				2				48
GND 07		B07C2		1-10				1				48
GND 07		B07D1		1-11				2				48
GND 07		B07E1		1-12				1				48
GND 07		B07T1		1-13				2				48
GND 07		B07V2		1-14				1				48
				1								48
										37-2/8		48
GND 08		A08B2		1-01								
GND 08		A08C2		1-02				1				49
GND 08		A08N1		1-03				2				49
GND 08		A08P1		1-04				1				49
GND 08		A08R1		1-05				2				49
GND 08		A08S1		1-06				1				49
GND 08		A08T1		1-07				2				49
GND 08		A08V1		1-08				1				49
GND 08		B08B2		1-09				2				49
GND 08		B08C2		1-10				1				49
GND 08		B08D1		1-11				2				49
GND 08		B08E1		1-12				1				49
GND 08		B08T1		1-13				2				49
GND 08		B08V2		1-14				1				49
				1								49
										37-2/8		49
GOOD STROBE	L	B02E1		1-01		D05-5		1				
GOOD STROBE	L	B03D1		1-02		D05-5						50
GOOD STROBE				1								50
										3-6/8		50
HEAD SELECT	L	A01P1		1-01		D05-1		1				
HEAD SELECT	L	B07M2		1-02		D05-1		2				51
HEAD SELECT	L	B08M2		1-03		D05-1						51
HEAD SELECT				1								51
										11-3/8		51
HIGH DENSITY	L	A01R2		1-01		D05-4		1				
HIGH DENSITY	L	B07P2		1-02		D05-4		2				52
HIGH DENSITY	L	B08P2		1-03		D05-4						52
HIGH DENSITY				1								52
										10-3/8		52

	A/P	PIN NAME	ORDER PIN	BAY - ORDER	Q	DRAW RV PG Y	X	Z	REMARKS	LENGTH	EXCEPTIONS	RUN NUMBER
HOME	L	A04R1		1-01		D05-7		2				
HOME	L	B03B1		1-02		D05-7		1				53
HOME	L	B06F1		1-03		D05-7						53
HOME				1								53
										9-6/8		53
INDEX PULSE	L	A02R2		1-01		D05-3		1				
INDEX PULSE	L	A04J1		1-02		D05-3						54
INDEX PULSE				1								54
										4-1/8		54
INDEX/SECTOR	L	B02D1		1-01		D05-5		1				
INDEX/SECTOR	L	B04H2		1-02		D05-5						55
INDEX/SECTOR				1								55
										4-4/8		55
INNER LIMIT	H	A05B1		1-01		D05-2		1				
INNER LIMIT	H	A03U1		1-02		D05-2		2				56
INNER LIMIT	H	B02J1		1-03		D05-2						56
INNER LIMIT				1								56
										11-0/8		56
INTERLOCK	L	A04H1		1-01		D05-7		1				
INTERLOCK	L	A06R1		1-02		D05-7						57
INTERLOCK				1								57
										4-3/8		57
LIMIT	H	A05K1		1-01		D05-9		1				
LIMIT	H	B06H1		1-02		D05-9						58
LIMIT				1								58
										6-0/8		58
LOAD HEADS	L	B03C1		1-01		D05-6		1				
LOAD HEADS	L	B04C1		1-02		D05-6						59
LOAD HEADS				1								59
										3-4/8		59
LOAD IND	H	A04L1		1-01		D05-8		1				
LOAD IND	H	A06A1		1-02		D05-8						60
LOAD IND				1								60
										4-3/8		60
LOAD SW	L	A06K1		1-01		D05-7		1				
LOAD SW	L	B04D1		1-02		D05-7						61
LOAD SW				1								61
										6-0/8		61
MOVE	L	A03L1		1-01		D05-2		1				
MOVE	L	B02P1		1-02		D05-2						62
MOVE				1								62
										6-6/8		62
NO PROTECT	L	A01N2		1-01		D05-1		1				
NO PROTECT	L	B04H1		1-02		D05-1						63
NO PROTECT				1								63
										6-2/8		63

RUN NAME

A/P	PIN NAME	ORDER PIN	BAY - ORDER	Q	DRAW RV PG	Y	X	Z	REMARKS	LENGTH	EXCEPTIONS	RUN NUMBER
L	A02A1		1-01		D05-5			1				64
L	A03M1		1-02		D05-5							64
			1							4-6/8		64
H	A03K1		1-01		D05-6			2				65
H	A04K1		1-02		D05-6			1				65
H	A05D1		1-03		D05-6							65
			1							7-4/8		65
H	B05U2		1-01		D05-9			1				66
H	B06M1		1-02		D05-9							66
			1							4-0/8		66
H	A06C1		1-01		D05-8			1				67
H	B04U2		1-02		D05-8							67
			1							8-2/8		67
H	A02D1		1-01		D05-2			1				68
H	B06K1		1-02		D05-2							68
			1							8-2/8		68
H	A03P1		1-01		D05-5			1				69
H	B04J1		1-02		D05-5			2				69
H	B02L1		1-03		D05-5							69
			1							10-0/8		69
L	A01P2		1-01		D05-1			1				70
L	B02K1		1-02		D05-1							70
			1							5-4/8		70
L	A01F2		1-01		D05-2			1				71
L	B07S1		1-02		D05-2			2				71
L	B08S1		1-03		D05-2							71
			1							11-4/8		71
L	A01E2		1-01		D05-2			1				72
L	B07S2		1-02		D05-2			2				72
L	B08S2		1-03		D05-2							72
			1							11-7/8		72
L	A01K2		1-01		D05-1			1				73
L	B08R1		1-02		D05-1			2				73
L	B07R1		1-03		D05-1							73
			1							11-3/8		73

RUN NAME

A/P	PIN NAME	ORDER PIN	BAY - ORDER	Q	DRAW RV PG	Y	X	Z	REMARKS	LENGTH	EXCEPTIONS	RUN NUMBER
H	A02E2		1-01		D05-9			1				74
H	A06J1		1-02		D05-9							74
			1							5-2/8		74
H	A02C1		1-01		D05-3			1				75
H	A04U1		1-02		D05-3							75
			1							5-6/8		75
H	A06B1		1-01		D05-8			1				76
H	B04N1		1-02		D05-8							76
			1							8-0/8		76
H	A02B1		1-01		D05-4			1				77
H	A03J1		1-02		D05-4							77
			1							3-7/8		77
L	A08M1		1-01		D05-2			2				78
L	A07M1		1-02		D05-2			1				78
L	B02B1		1-03		D05-2							78
			1							10-2/8		78
H	B03H1		1-01		D05-5			1				79
H	B05K2		1-02		D05-5							79
			1							4-4/8		79
L	A08U1		1-01					2				80
L	A07U1		1-02					1				80
L	B02U1		1-03									80
			1							10-2/8		80
L	A03F1		1-01		D05-2			1				81
L	B02C1		1-02		D05-2							81
			1							6-0/8		81
L	A06L1		1-01		D05-7			1				82
L	B04L1		1-02		D05-7							82
			1							6-6/8		82
L	A02S2		1-01		D05-9			1				83
L	B04K1		1-02		D05-9							83
			1							5-6/8		83
H	A02E1		1-01		D05-2			1				84
H	B06L1		1-02									84
			1							8-4/8		84

RUN NAME	A/P	PIN NAME	ORDER PIN	BAY - ORDER	Q	DRAW RV PG Y	X	Z	REMARKS	LENGTH	EXCEPTIONS	RUN NUMBER
SEEK DONE IND	H	A02V1		1-01		D05-5		1				
SEEK DONE IND	H	A06F1		1-02		D05-5						85
SEEK DONE IND				1								85
										5-7/8		85
SEL/WRITE PROTECT SET	L	B02R1		1-01		D05-5		1				
SEL/WRITE PROTECT SET	L	B04B1		1-02		D05-5						86
SEL/WRITE PROTECT SET				1								86
										5-2/8		86
SELECT	H	A01S2		1-01		D05-2		2				
SELECT	H	A04S1		1-02		D05-2		1				87
SELECT	H	B02V2		1-03		D05-2						87
SELECT				1								87
										11-0/8		87
SELECT 1	L	A08J2		1-01		D05-3		2				
SELECT 1	L	A07J2		1-02		D05-3		1				88
SELECT 1	L	B02R2		1-03		D05-3						88
SELECT 1				1								88
										11-1/8		88
SELECT 2	L	A08K2		1-01		D05-3		2				
SELECT 2	L	A07K2		1-02		D05-3		1				89
SELECT 2	L	B02S2		1-03		D05-3						89
SELECT 2				1								89
										11-1/8		89
SELECT 3	L	A08L2		1-01		D05-3		2				
SELECT 3	L	A07L2		1-02		D05-3		1				90
SELECT 3	L	B02T2		1-03		D05-3						90
SELECT 3				1								90
										11-1/8		90
SELECT 4	L	A08M2		1-01		D05-3		2				
SELECT 4	L	A07M2		1-02		D05-3		1				91
SELECT 4	L	B02U2		1-03		D05-3						91
SELECT 4				1								91
										11-1/8		91
SELECT/READY	L	A01H2		1-01		D05-1		1				
SELECT/READY	L	A04V1		1-02				2				92
SELECT/READY	L	B02H1		1-03		D05-1						92
SELECT/READY				1								92
										9-6/8		92
SELECTED READ GATE	H	A01B1		1-01		D05-9		1				
SELECTED READ GATE	H	A02F2		1-02		D05-9						93
SELECTED READ GATE				1								93
										3-7/8		93
SELECTED WRITE GATE	H	A01V1		1-01		D05-1		1				
SELECTED WRITE GATE	H	A02V2		1-02		D05-1						94
SELECTED WRITE GATE				1								94
										3-6/8		94

RUN NAME	A/P	PIN NAME	ORDER PIN	BAY - ORDER	Q	DRAW RV PG Y	X	Z	REMARKS	LENGTH	EXCEPTIONS	RUN NUMBER
SET UNSAFE	L	A01U2		1-01		D05-1		1				
SET UNSAFE	L	B04A1		1-02		D05-1						95
SET UNSAFE				1								95
										4-7/8		95
SIN POSITION	H	A05N1		1-01		D05-9		1				
SIN POSITION	H	B06D1		1-02		D05-9						96
SIN POSITION				1								96
										5-2/8		96
STROBE	L	B02V1		1-01		D05-2		1				
STROBE	L	B07H1		1-02		D05-2		2				97
STROBE	L	B08H1		1-03		D05-2						97
STROBE				1								97
										10-2/8		97
UNSAFE	L	A01L2		1-01		D05-1		1				
UNSAFE	L	A04V2		1-02		D05-1						98
UNSAFE				1								98
										5-2/8		98
WRITE DATA + CLK	H	A01J1		1-01		D05-1		1				
WRITE DATA + CLK	H	A07F2		1-02		D05-1		2				99
WRITE DATA + CLK	H	A08F2		1-03		D05-1						99
WRITE DATA + CLK				1								99
										10-0/8		99
WRITE GATE	L	A01J2		1-01		D05-1		1				
WRITE GATE	L	B07L2		1-02		D05-1		2				100
WRITE GATE	L	B08L2		1-03		D05-1						100
WRITE GATE				1								100
										10-7/8		100
WRITE PROTECT SET	L	B02S1		1-01		D05-3		1				
WRITE PROTECT SET	L	B07R2		1-02		D05-3		2				101
WRITE PROTECT SET	L	B08R2		1-03		D05-3						101
WRITE PROTECT SET				1								101
										9-4/8		101
WRITE SW OFF	L	A06N1		1-01		D05-7		1				
WRITE SW OFF	L	B04F1		1-02		D05-7						102
WRITE SW OFF				1								102
										6-0/8		102
WRITE SW ON	L	A06M1		1-01		D05-7		1				
WRITE SW ON	L	B04E1		1-02		D05-7						103
WRITE SW ON				1								103
										6-0/8		103
WRITING IND	H	A02U1		1-01		D05-5		1				
WRITING IND	H	A06E1		1-02		D05-5						104
WRITING IND				1								104
										5-7/8		104